AO® 12603 LENSOMETER®

LENS MEASURING INSTRUMENT

INSTRUCTIONS

Price $1.00

AO Reichert™ Scientific Instruments
DIVISION OF WARNER-LAMBERT TECHNOLOGIES, INC.
P.O. Box 123, Buffalo, NY 14240
BOX 123, BUFFALO, NY 14240

WARRANTY

These American Optical Ophthalmic Instrument products are warranted against defective material and workmanship under normal use and application for a period of one year from the date of invoice to the original purchaser. (An authorized distributor shall not be considered an original purchaser.) Under this warranty American Optical's sole obligation is to repair or replace, at the American Optical Scientific Instrument Division's discretion, the product or defective part thereof.

This warranty applies only to new products and does not apply to a product which has been tampered with or altered in any way or which has been misused or damaged by accident or negligence or which has the serial number removed, altered or effaced, nor shall this warranty extend to a product installed or operated in a manner not in accordance with the applicable American Optical Instruction Manual, nor to a product which has been serviced or repaired other than by an American Optical factory, branch, technical service center, or authorized instrument distributor.

Lamps, bulbs, charts, cards and other expendable items are not covered by this warranty.

All claims under this warranty must be in writing directed to the American Optical local office or instrument distributor making the original sale and must be accompanied by a copy of the purchaser's invoice.

This warranty is in lieu of all other warranties implied or expressed. All implied warranties of merchantability or fitness for a particular purpose are hereby disclaimed. No representative or other person is authorized or allowed to make any obligation for American Optical.

American Optical Corporation shall not be liable for any special, incidental or consequential damages from any negligence, breach of warranty, strict liability or any other theory arising out of, or relating to the design, manufacture, sale, use or handling of the product.

CLAIMS FOR SHORTAGES

We use extreme care in selection, checking, rechecking and packing to eliminate the possibility of error. If any shipping discrepancies are discovered, claims should be made to the place of shipment within 10 days.

CLAIMS FOR DAMAGE IN TRANSIT

Our shipping responsibility ceases with safe delivery in good condition to the transportation company. Claims by the customer for damage in transit should be made to the transportation company as follows:

If, upon delivery, the outside of the packing case shows evidence of rough handling or damage, the transportation company's agent should be requested to make a "Received in Bad Order" notation on the delivery receipt. If there is no exterior evidence of rough handling upon delivery but concealed damage is evident upon unpacking the shipment, the transportation company should, within 48 hours of delivery, be requested to make out a "Bad Order" report. This procedure is necessary in order to maintain the right of recovery from the carrier.

PRODUCT CHANGES

American Optical Corporation reserves the right to make changes in design or to make additions to or improvements in its products without imposing any obligation on itself to add such to products previously manufactured.

ILLUSTRATIONS AND DESCRIPTIONS

The instruments supplied may not agree in all details with the description or illustrations in this Instruction Manual as instruments are subject to modification and revision.

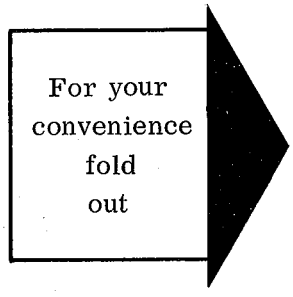

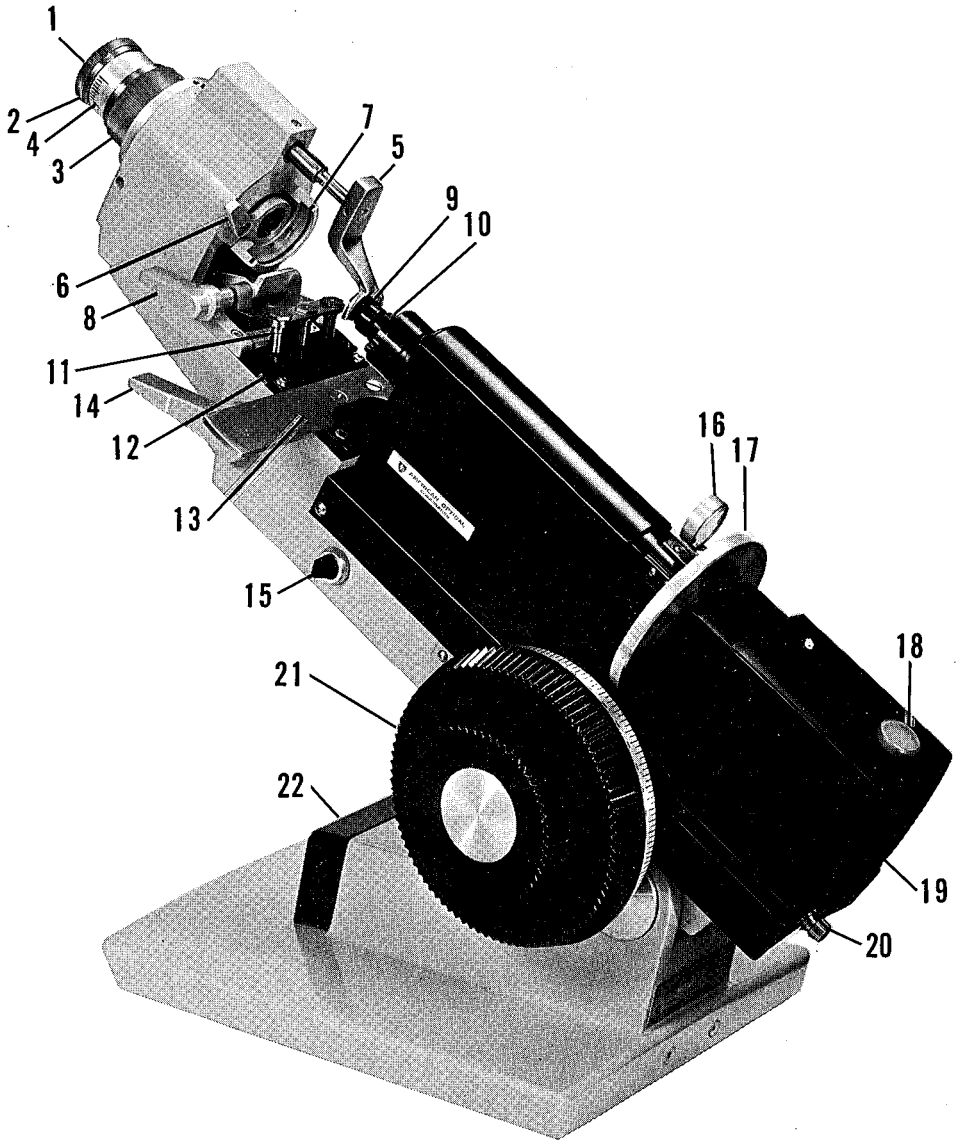

Figure 1

DESCRIPTION

1. Focusable Eyepiece
2. Eyepiece Lockscrew
3. Prism Direction Ring
4. Eyepiece Scale
5. Lens Holder
6. Green Filter
7. Auxiliary Prism Holder
8. Lens Marker Lever
9. Gimbal Action Ring Support
10. Interchangeable Nosepieces (2) Standard Black; Contact Lens White
11. Marking Pens
12. Ink Well
13. Spectacle and Lens Table
14. Spectacle and Lens Table Raising Lever
15. ON-OFF Switch
16. Axis Wheel Magnifier
17. Axis Wheel and Scale
18. Pilot Light
19. Lamp Housing
20. Lamp Housing Thumb Screw
21. Power Wheel and Scale
22. Base Compartment
23. Prism Direction Indicator Line
24. Prism Power Rings
25. Cylinder Power Lines (Wide Target Lines)
26. Sphere Power Lines (Narrow-Wide-Narrow Comb.)
27. Prism Direction Scales

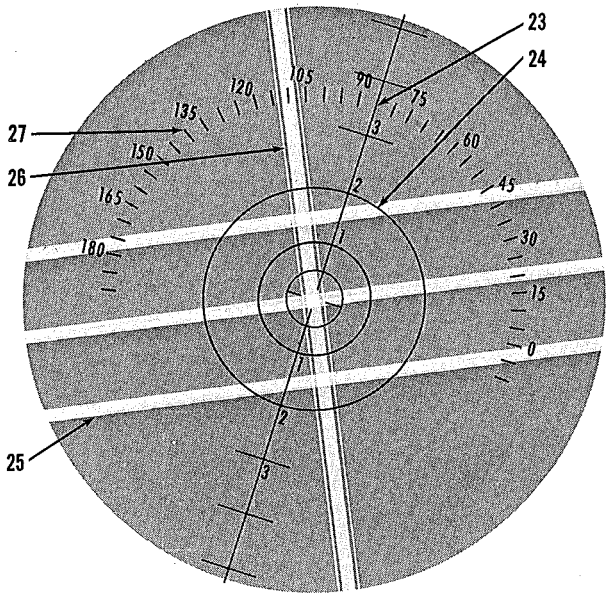

Figure 2

ADJUSTING INSTRUMENT FOR USE

1. Place the instrument on a desk, table, or bench which is at a comfortable working height.

2. Plug the cord into any convenient 110 volt A.C. current outlet and turn the instrument on using the on-off switch (15).

3. The green filter (6) should normally be in the optical path. It should only be removed if more illumination is needed when measuring dark lenses. Merely depress the filter lever and flip the filter out of the optical path.

4. Set the power scale on zero using the power wheel (21).

5. With the power scale on zero, look at the reticle lines. Turn the focusing eyepiece clockwise until the reticle lines are in sharp focus. This adjusts the instrument for your eye. Make a note of the focusable eyepiece scale setting. In the future simply set the eyepiece to the same setting to adjust it for your eye; or when desirable, tighten eyepiece lockscrew (2), smaller of the two screws, for retaining permanent position.

NOTE: In the attached cloth bag are ink well pads, and circular rubber pads which may be used on the eyepiece to prevent accidental scratching if spectacles are worn.

INSERTING AND CENTERING LENS FOR MEASUREMENT

1. Pull back the lens holder (5) and insert the lens with its concave side against the nosepiece.

2. Release lens holder; it will extend and hold lens against nosepiece.

3. Adjust the spectacle lens table height, using lever (14), so that the lens will be approximately centered against the nosepiece when resting on the table.

4. Look into the eyepiece. If the power of the lens makes the bright-line target too blurred to center, rotate the power wheel until the target lines are in approximate focus. Raise or lower the lens and slide the lens or spectacles from side to side on the lens table until centering is achieved, as in Figure 2.

MEASURING THE POWER OF A SPHERICAL LENS

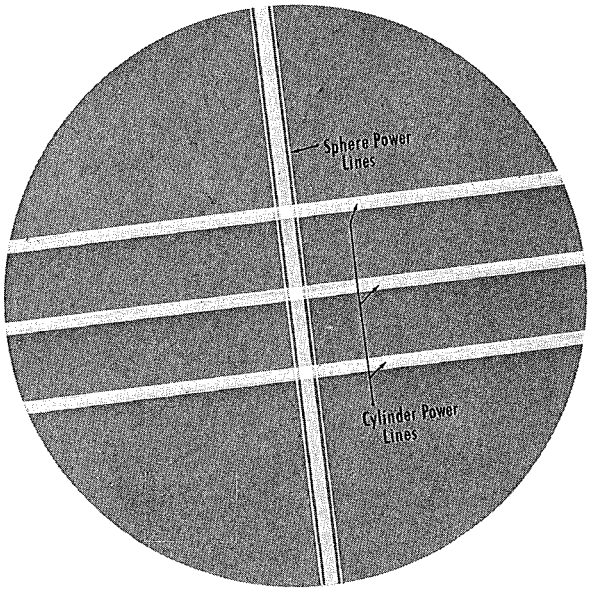

Figure 3

1. While looking into the eyepiece, rotate the power wheel (21) either away from you or towards you as required until the bright-line target comes into sharp focus. If all of the lines of the target come into focus at the same time, the lens is a simple sphere. (See Figure 3)

2. Read the power of the lens on the power wheel (21). The red portion indicates minus - the black portion indicates plus. The scale is divided into 0.12 diopter steps up to plus and minus 3 diopters and in 0.25 diopter steps up to plus and minus 20 diopters.

MEASURING THE POWER AND AXIS OF CYLINDERS AND SPHERO-CYLINDERS

IF YOU WISH TO READ IN MINUS CYLINDERS

1. Insert and center the lens.

2. Bring the sphere power lines into focus (narrow-wide-narrow comb.).

3. Using the axis wheel (17), rotate the target. The target is on axis when the three sphere power lines are continuous. When it is off axis these lines are not continuous, as in Figure 4A. Once lens or axis wheel is rotated to the proper axis, the lines will become continuous, as in Figure 4B.

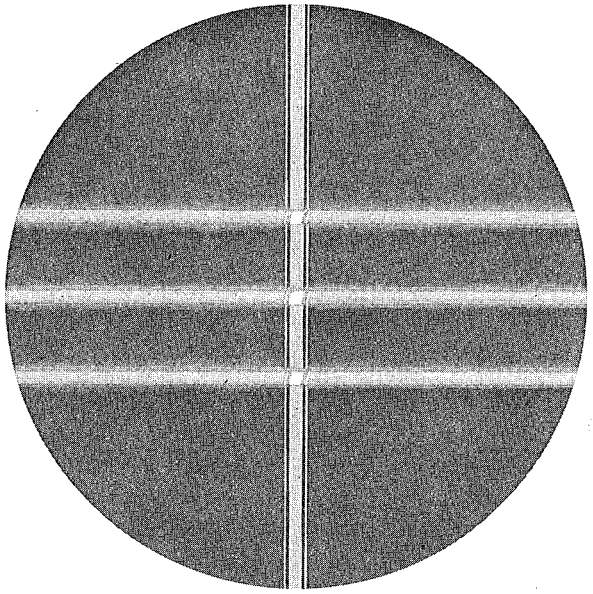

Figure 4A

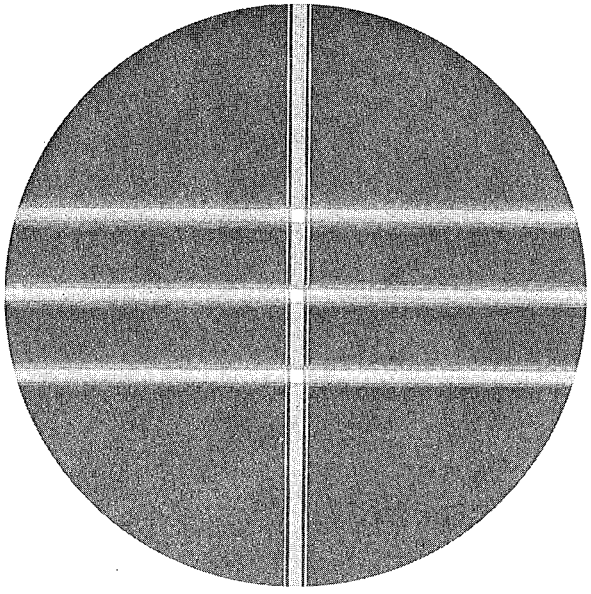

Figure 4B

IF YOU WISH TO READ IN PLUS CYLINDERS

1. Insert and center the lens.

2. Bring the three sphere power lines into focus.

3. Using the axis wheel (17) rotate the target. The target is on axis when the three sphere power lines are continuous. When it is off axis, these lines are not continuous, as in Figure 4A. Once lens or axis wheel is rotated to the proper axis, the lines will become continuous, as in Figure 4B.

DIRECTION OF TRAVEL

4. Rotate the power wheel (21) to determine in which direction you have to go to bring the three wide target lines into focus.

5. If you have to go in a plus direction (either more plus or less minus power), the target is properly oriented to read in plus cylinders.

6. If you have to rotate the power wheel in a minus direction (either more minus or less plus power), to bring the three wide target lines into focus, the target is oriented to read in minus cylinders. To read in plus cylinders you must rotate the target 90° using the axis wheel.

7. When the target is properly oriented to read in plus cylinders, bring the three sphere power lines into sharp focus.

8. Take the reading on the power wheel (21). This is the sphere power.

9. Rotate the power wheel until the three wide target lines come into sharp focus.

AMOUNT OF TRAVEL

10. The difference between the two readings is the power of the cylinder. The axis of the plus cylinder is the one now indicated on the axis scale (17).

EXAMPLE:

		1	2	3
A	1st Reading	-5 diopters	+2.00 diopters	-0.50 diopters
B	2nd Reading	-3 diopters	+3.75 diopters	+0.75 diopters
C	Direction of Travel	+	+	+
D	Amount of Travel	2	1.75	1.25
E	Axis Reading	45°	90°	60°
F	Rx	-5.00 + 2.00 x 45 A C D E	+2.00 + 1.75 x 90 A C D E	-0.50 + 1.25 x 60 A C D E

DIRECTION OF TRAVEL

4. Rotate the power wheel (21) to determine in which direction you have to go to bring the three wide target lines into focus.

5. If you have to go in a minus direction (either more minus or less plus power), the target is properly oriented to read in minus cylinders.

6. If you have to rotate the power wheel in a plus direction (either more plus or less minus power) to bring the three wide target lines into focus, the target is oriented to read in plus cylinders. To read in minus cylinders, rotate the target 90° using the axis wheel (17).

7. When the target is properly oriented to read in minus cylinders, bring the three sphere power lines into sharp focus.

8. Take the reading on the power wheel (21). This is the sphere power.

9. Rotate the power wheel until the three wide target lines come into sharp focus.

AMOUNT OF TRAVEL

10. The difference between the two readings is the power of the cylinder. The axis of the minus cylinder is the one now indicated on the axis scale (17).

EXAMPLE:

		1	2	3
A	1st Reading	-3 diopters	+2.50 diopters	+0.50 diopters
B	2nd Reading	-5 diopters	+1.75 diopters	-1.00 diopters
C	Direction of Travel	-	-	-
D	Amount of Travel	2	.75	1.50
E	Axis Reading	135°	170°	10°
F	Rx	-3.00 - 2.00 x 135 A C D E	+2.50 - 0.75 x 170 A C D E	+0.50 - 1.50 x 10 A C D E

BIFOCALS

There are two methods in use today by which the power of bifocal additions are measured.

I. The Practical Method

This method is commonly used for:

a. Ultex type of segments.

b. All other types of bifocal lenses in the lower power range.

1. Insert and center the lens with the concave surface towards the nosepiece.

2. Take a power reading of the distance portion.

3. After taking a reading on the three wide target lines, bring the three sphere power lines again into focus. The power now indicated on the power wheel is the power of the spherical portion of the lens.

4. Raise the lens using the spectacle table raising lever (14) until the bifocal segment is over the nosepiece of the instrument.

5. Refocus until the three sphere power lines come into clear, sharp focus.

6. The difference between this reading and the reading on the distance spherical portion of the lens is the power of the bifocal addition.

II. The Exact Method

This is the exact method which is used especially for higher power bifocal lenses having segments on the convex side.

1. After measuring the distance prescription with the concave surface against the nosepiece (10), place the convex side of the lens toward the nosepiece.

2. Lower the lens about 6mm so that you are looking through a point about 6mm above the optical center of the lens. Bring the three sphere power lines into focus and take a power reading.

3. Raise the lens so that you are looking through a point about 6mm below the optical center of the lens. This should be through the segment.

4. Again focus the three sphere power lines and take a power reading.

5. The difference between this reading and the reading 6mm above the optical center of the lens is the power of the bifocal addition. Occasionally the prismatic effect of the lens and segment will bend the light so that it does not enter the objective end of the telescope. When this happens, insert a prism of sufficient power into the auxiliary prism cell and rotate it until the target comes into the field of view.

NOTE: For those who prefer only one uniform method for measuring all bifocal additions, Method II may be used, since the error in the measurement of the Ultex type segments is very slight.

REDDIMARK LENS MARKER

INK WELL

To remove the well you must first raise the spectacle table to its highest position. Next slide the ink well out toward the spectacle table post and remove it.

The type and color of marking ink to be used is a matter of individual preference. (Fast drying vs slow drying; Water Soluble vs Non-Soluble, etc.) For general all-around success, any good quality brand of India ink is satisfactory. It can be purchased at the stationery store. (Non-lacquered base inks are recommended because lacquer base inks can be harmful to plastic lenses.)

Remove the ink pad from the well. Before inking, it is necessary to soak the pad in water to make it absorbent. Be certain to squeeze out excess water before replacing pad in well and applying ink.

Procedure for Marking Lens for Lab Layout or to Check for Decentration

1. Insert and center the lens or spectacles.
2. Pull up on lens marker lever (8). This will cause the pens to dip into the ink. To mark the lens, simply push lever (8) down and forward; 3 small dots will mark the lens.
3. After the pens have marked the lens, release the lever and the inking device will automatically recoil into its storage position.
4. If you are marking for layout, the lens is now ready to be laid out according to normal laboratory procedure.
5. If you are checking spectacles for decentration, repeat this marking procedure on the other lens.
6. After both lenses have been marked, remove the spectacles from the Lensometer. Using a PD rule, measure the distance between the center dots. This measurement is the distance between the optical centers of the lenses.

PRISM POWER AND AXIS RETICLE

The prism measuring reticle measures up to 5 prism diopters. For measurements beyond 5 prism diopters, insert the 5 diopter prism (located in the base compartment) (22) into the auxiliary prism cell (7). The base of this auxiliary prism should be opposite in direction to the base of the prism in the prescription. The power of the auxiliary prism is then added to the amount of prism measured on the prism reticle.

For example, to measure a lens with 9 prism diopters base-up (90°) set the prism direction indicator line on axis 90° and insert a 5 diopter auxiliary prism base-down in the auxiliary prism cell. Place the lens to be measured in the instrument. The prism reticle will now show 4 prism diopters base-up (axis 90°).

When measuring prism power on either the right or left lens, the bright-line target is decentered up for base-up prism and down for base-down prism.

If the prescription has base-in prism on the right lens, the bright line target will be decentered to your right when looking into the eyepiece. For base-out prism on the right lens the target will be decentered to your left. On the left lens it is just the opposite - the target will be decentered to your left for base-in and to the right for base-out. In other words, the direction of the decentration of the target in the eyepiece is always in the same direction as the base of the prism.

The prism power is indicated on the reticle as shown in Figure 5.

When a prescription is base-in or base-out prism, the axis (base-apex line) is horizontal or 180°.

When a prescription has base-up or base-down prism, the axis (base-apex line) is vertical or 90°.

When a combination of both horizontal and vertical prism is present in one lens, the base of the resultant prism is at an oblique axis. For example:

Right eye 3 prism diopters base-in and up at 30°.

Left eye 2-1/2 prism diopters base-out and up at 25°.

Right eye 4 prism diopters base-in and down at 160°.

Left eye 2 prism diopters base-out and down at 120°.

The axis (base-apex line) is located by turning Prism Direction Ring until the prism direction indicator line intersects the center of the bright-line target. Then read the axis in degrees from the protractor within the eyepiece.

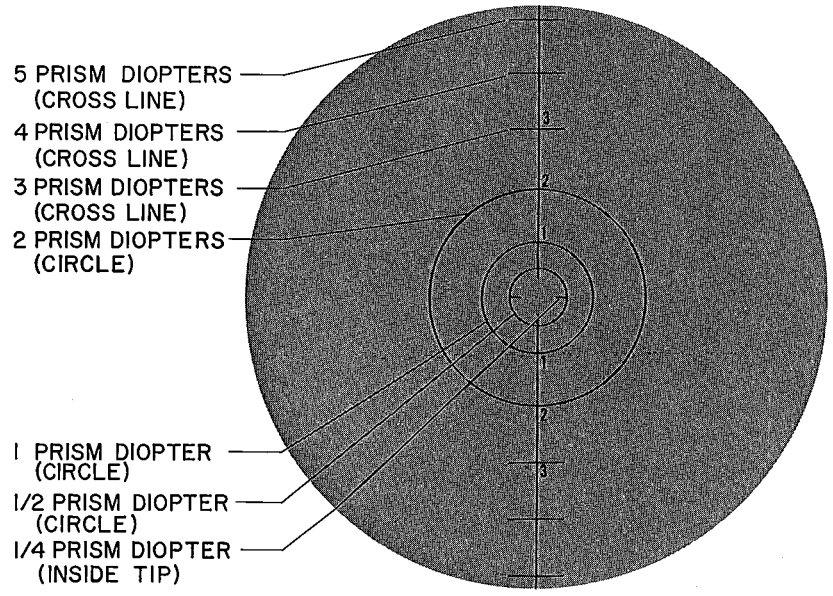

Figure 5

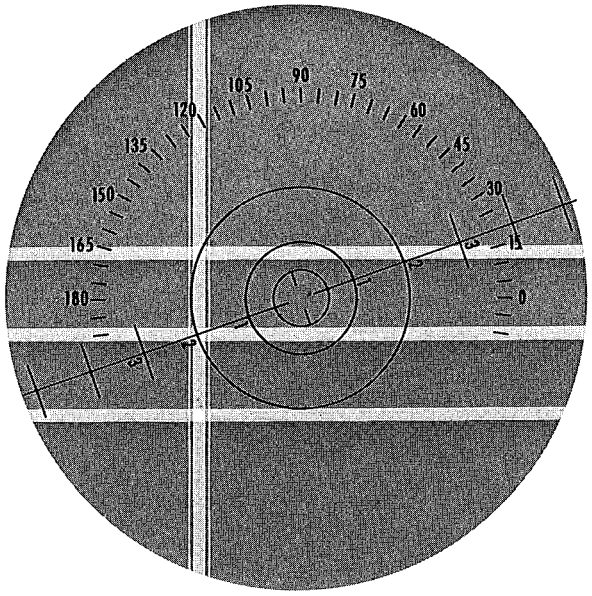

Figure 6

EXAMPLE 2△

The scale is engraved with power numbers at 1 prism diopter, 2 prism diopters and 3 prism diopters. The point at which the center of the displaced bright-line target intersects the prism reticle indicates the prism power.

Checking Prism Prescription

1. Insert and center lens.
2. The lens must be centered on the nosepiece (10) so that the nosepiece is in the geometric center of the lens. This is accomplished by moving the lens by hand until its geometric center is over the nosepiece.
3. For verifying base-in or base-out prism, set the prism axis line on 180°. For verifying base-up or base-down prism, set the prism axis line on 90°. For verifying any intermediate prism axis, set the prism axis line on the prescribed axis. The point at which the center of the bright-line target intersects the prism axis line and the prism power circle or short line indicates the power and direction of the prism.

Marking Lens to Obtain Prism Power by Decentration

1. Insert the lens in the instrument and center it using the target as previously outlined under the centering section (page 3).
2. Focus the target and orient it on the proper cylindrical axis.
3. Set the prism axis line on the desired prism axis. If the prescription calls for base-in or base-out prism, set the prism axis line on 180°. If the prescription calls for base-up or base-down prism, set the prism axis line on 90°. If it calls for an intermediate axis, set the prism axis line accordingly.
4. Move the lens around until the center of the bright-line target intersects the prism axis line and the circle indicating the prism power desired.
5. Mark the lens with the marking device as previously outlined and it is ready for layout.

INTERCHANGEABLE NYLON NOSEPIECES

There are two nosepieces included with your 12603 LENSOMETER instrument.

1. The standard (black) nosepiece is in place on the instrument and is used when measuring regular spectacle lenses and for measuring the front vertex power of a contact lens.

2. For your convenience the contact lens nosepiece (white) stored in the base compartment of the Lensometer is used to measure the back vertex power of a contact lens.

3. To use the contact lens nosepiece, remove the standard black nosepiece by loosening the setscrew. Then, install the contact lens nosepiece in place of the standard nosepiece. Make certain nosepiece is fully seated and secure.

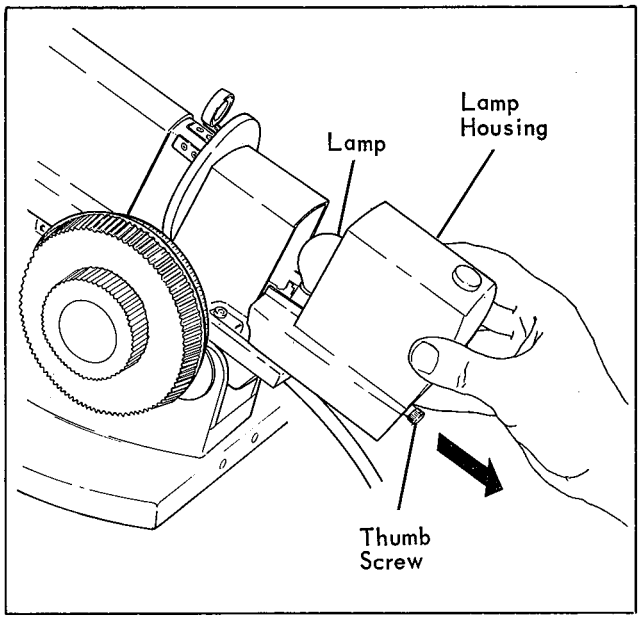

Figure 7

CHANGING BULB

1. UNPLUG CORD FROM RECEPTACLE.

2. Rack power wheel (21) to furthest plus.

3. Loosen thumbscrew (Figure 7) of lamp housing.

4. Pull lamp housing back and lift up.

5. Unscrew the old bulb and replace with a new bulb, Catalog No. 12604.

6. Replace the lamp housing; be certain housing is aligned with the two aligning pins. Secure thumbscrew.

ADJUSTMENTS

Tilt Position

The adjustable, inclined body of the 12603 Lensometer has been pre-set at the factory to meet most working conditions. However, if the user wishes to secure the inclination in one position, the two screws in the base (Figure 8) can be tightened.

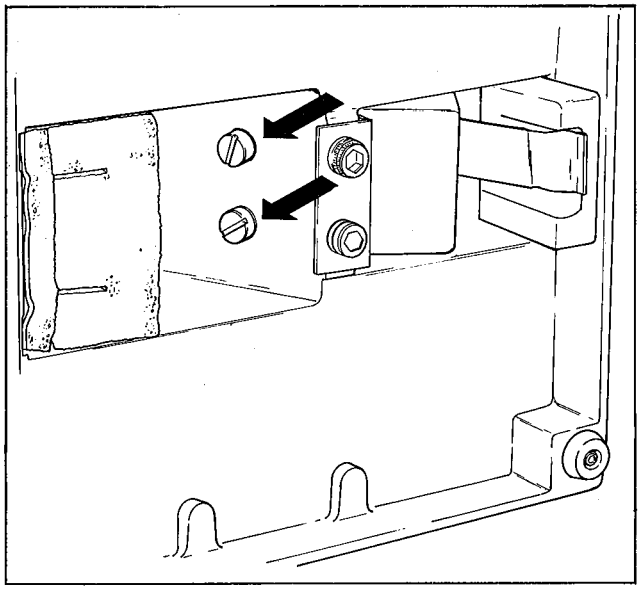

Figure 8

Axis Magnifier

For those who wish to read the axis on the right hand side of the Lensometer, the axis wheel magnifier can be positioned 90° to the right. A kit, No. 12600-900, may be ordered which contains 2 spline wrenches, magnifier bracket, and axis pointer ... Screwdriver, also needed, is not supplied.

Procedure:

1. Set axis wheel to 90° using top pointer.

2. a. Remove 2 screws on center drum of axis wheel (Figure 9). Push axis wheel back (this action will disengage wheel from drum).

   b. Rotate axis wheel 90° until 180° appears at the pointer (two new screw holes will appear).

   c. Replace 2 screws on axis drum.

3. Remove magnifier bracket from top position by unscrewing 2 screws which hold the magnifier and axis pointer.

4. Remove black plate from the side and place on top. (Figure 9)

5. Remove magnifier from its holder by unscrewing setscrew.

6. Secure magnifier on side bracket (from kit).

7. Place axis pointer beneath magnifier bracket and screw to the side position.

8. Before final tightening, check for maximum alignment by looking through eyepiece to insure axis pointer is aligned with the eyepiece reticle.

MAINTENANCE

The instrument is finished in smooth, epoxy enamel which is one of the hardest finishes available. With normal care it will last for years. An occasional wiping with a soft cloth will keep the finish looking like new. If dust gets on the surface of the lenses, blow it off with a rubber syringe. The slideways are all concealed and do not require additional lubrication. It is recommended that the instrument cover be used when the instrument is not in use.

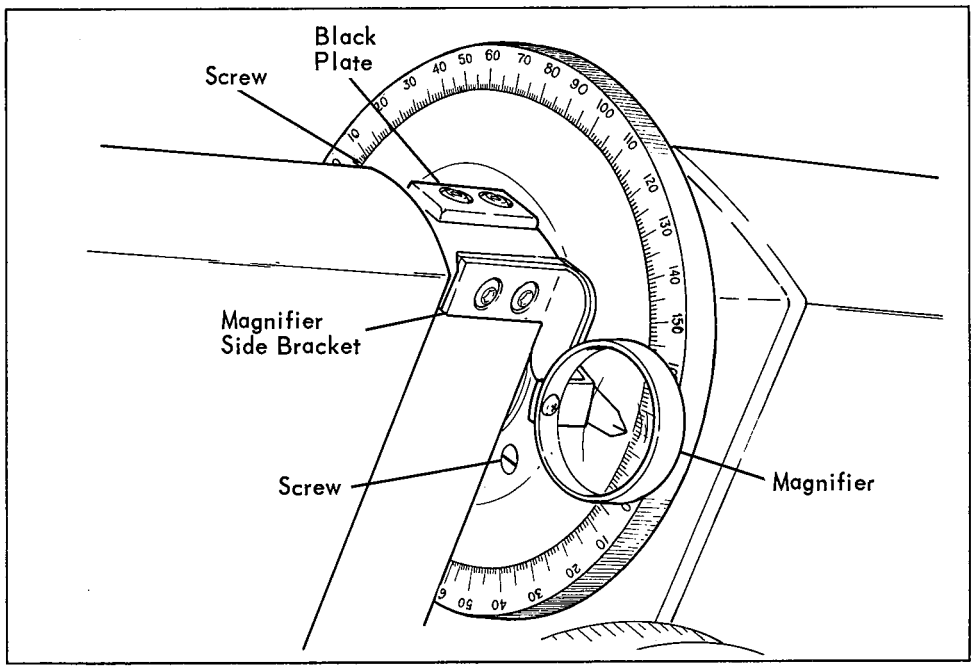

Figure 9

AO Reichert™ Scientific Instruments
DIVISION OF WARNER-LAMBERT TECHNOLOGIES, INC.
P.O. Box 123, Buffalo, NY 14240

BOX 123, BUFFALO, NY 14240

12603-101 12/81

Printed in U.S.A.