VERTOMETER

Cat. No. 21-65-70

INSTRUCTION MANUAL



BAUSCH & LOMB VERTOMETER, CATALOG NO. 21-65-70

1.0 Introduction

An important part of each handling of an ophthalmic lens, from manufacture to final inspection of the finished spectacle, is the measurement of lens power. Standard instrument for this purpose in the factory, laboratory, and professional office is the Vertometer. Properly used, the Vertometer will measure the spherical, cylindrical, prism powers of a lens, locate cylinder axis, and prism base-apex line. With the built-in marking device it provides an efficient and precise means of marking lenses for cutting and edging. With the built-in adjustable lens table, finished glasses can be measured for adherence to Rx, for vertical prism differences, either wanted or unwanted, and for segment height.

This Model 70 Vertometer is equipped with a switch which will allow you to select high or low intensity illumination as necessary for inspecting colored, coated, dyed or white lenses. We recommend that, for minimum operator eye strain and fatigue, the low illumination be used for white, Soft-Lite®, Kalichrome and lighter Ray-Ban® lenses in gray and green tints; and that the high intensity illumination be reserved for darker gray and green and protective tints.

From a utilitarian viewpoint the Vertometer must perform accurately month after month, demanding little, if any, mechanical attention. It must do this in the prescription laboratory for hundreds of lenses a day, as well as in the professional office for a relatively few measurements per day. The instrument must have a modern professional appearance for the professional office, yet be built as wear-proof as possible for heavy usage in a laboratory shop.

Your new Vertometer incorporates optical and mechanical design advances made possible by our experience with these instruments in factory lens inspection, as well as in Rx laboratory, and professional office use. Improvement over similar instruments will become apparent as you use the Vertometer. Some are pointed out in the following Reference Manual.

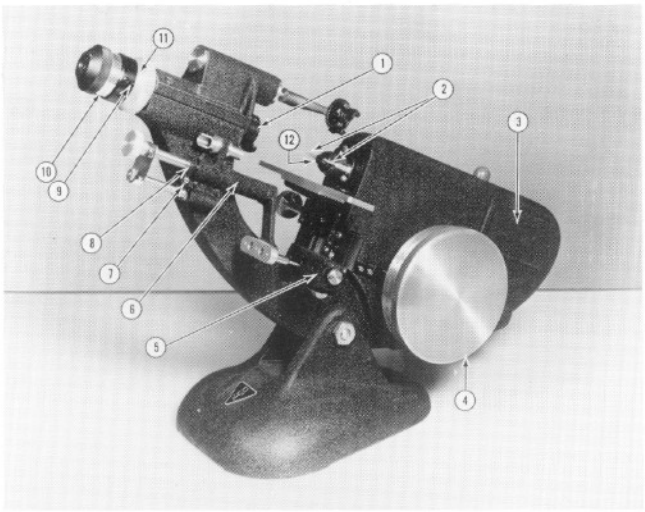

Fig. 1 Right Side View

1. Prism Cage
2. Axis Pins
3. Lamp Access Hole Cover
4. Power Drum
5. Inkwell
6. Marking Device
7. Screw
8. Clamp
9. Fiducial Line
10. Eyepiece Scale
11. Prism Scale
12. Lens Stop

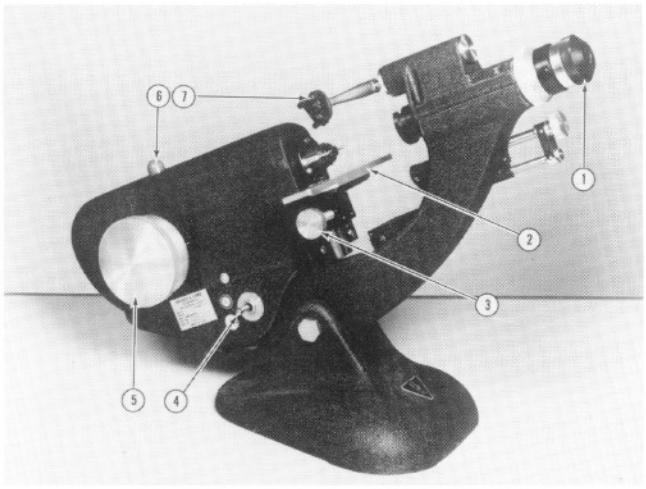

Fig. 2 Left Side View

1. Eyepiece
2. Lens Table
3. Lens Table Control
4. Switch
5. Cylinder Axis Drum
6. Pilot Light
7. Lens Holder

Unpacking

The Vertometer equipment includes the following:

The Vertometer
3 Auxiliary Prisms, 3 Δ, 6 Δ, 9 Δ.
1 Container of Red Stamp Pad Ink (Cat. No. 712661-351 ND)
2 Extra Ink Pads (Cat. No. 21-65-78)
1 Transparent Cover (Cat. No. 21-65-72)
1 Instruction Manual (Cat. No. 216570-100 ND)

This equipment is shipped in one case, instrument assembled, and adjusted, ready for use. After unpacking, set the instrument on the table or bench in its intended place of use and plug the cord into an electrical outlet carrying 120 Volts, AC only.

General Description

For all its accuracy, the Vertometer is a relatively simple instrument to use. Brief descriptions of the several parts are given so that the operator will understand the function of each. However, these descriptions are in no sense directions for use; step-by-step instructions are outlined in the chapter on Operation. These descriptions merely serve to supplement, and make easier to follow, the detailed instructions given later. Identification of the several parts can be made by reference to Figures 1 and 2.

Fundamentally, the Vertometer is a centered optical system consisting of a light source, a movable, rotatable target, a standard lens, a telescope, means for holding a spectacle lens at the standard lens anterior principle focus, means for rotating and shifting target position, and a mechanical coaxial marking device. With a spectacle lens centered in position for measuring, the target is positioned to be imaged, by the standard lens, at the focus of the spectacle lens. In this position the target is imaged on the telescope reticle by the spectacle lens, and can be viewed through the telescope eyepiece.

Eyepiece

The eyepiece lens is part of the telescope of the Vertometer. The telescope also contains the reticle lens and the objective lens. Rotating the eyepiece focuses the reticle of the telescope for the individual visual requirement of the user. A scale has been added to the eyepiece. When the eyepiece is in focus, the scale marking aligned with the fiducial mark should be noted. Then later it will be easy to directly set the correct focus. This feature is especially useful if several people are using the Vertometer and the eyepiece position will be changed frequently. If only one person will be using the Vertometer, no other focus adjustment will be necessary once the initial addjustment is made. The eyepiece is also fitted with a nylon ring to prevent it from scratching eyeglasses and is tapered to permit more comfortable viewing.

Prism Scale

This knurled periphery scale controls the position of the reticle lens of the eyepiece. It is engraved in 5° intervals from 0° - 180°, and is rotatable through 180°. The reticle lens is engraved with a median cross line and concentric circles which are calibrated in prism diopters, 0.50Δ, 1.00Δ, 1.50Δ, 2.00Δ, 3.00Δ, 4.00Δ,

5.00Δ. By rotating the Prism Scale, the reticle is rotated to locate prism base-apex line.

Auxiliary Prism Cage

A holder for auxiliary prisms is located immediately in front of the telescope objective. An eccentric target image (caused by the prismatic effect of the lens being measured) is brought back to center, or near center in the eyepiece field by placing an auxiliary prism in this cage.

Lens Holder

This spring-loaded rod, arm and gimbal mounted pressure plate with black nylon ball-tipped contacts holds the lens against the lens stop. The shape of the arm provides a finger hold for releasing the lens holder. The holder may be placed in the out-of-use position to the right or left, or in the detented center position.

Lens Stop

The Lens Stop is a non-scratching nylon cone against which the lens seats. The stop is factory adjusted to position the lens at the anterior principle focus of the standard lens, and is locked in place with a lock-nut. Its adjustment should be attempted only under the circumstances detailed under Lens Stop Adjustment, page 11.

Axis Pins

The Axis Pins are located on each side of the lens stop and serve as locating points against which the cutting line of a lens can be placed to determine the cylinder axis. By actual contact with the lens surface, inaccuracies due to parallax are eliminated.

Standard Lens

The Standard Lens is enclosed in a mount directly behind the lens stop. Its position relative to the lens stop is most important because it affects the final results of lens analysis. If altered, refer to Standard Lens Adjustment, page 11 to correct the error.

Lens Table

The Table is mounted on a dovetail slide with vertical motion controlled by a knurled knob through a rack and pinion. Target, 180° axis, and the 180° line in the reticle of the telescope are adjusted to parallelism with this table. This permits accurate measurement of spectacles as mounted in the frame. An accompanying scale denotes table distance below optical center.

Cylinder Axis Drum

This knurled drum is marked in degrees from 0° - 180° and controls rotation of the target axis through a mechanical linkage. The drum turns through one complete revolution (360°) to effect one-half revolution (180°) of the target, doubling axis determination accuracy.

Power Drum

The Power Drum is the large drum on the right side of the instrument. It has a knurled periphery and is engraved with a 0 to 20 diopter scale. The drum size is of large diameter to permit a delicate rotational control of power.

Lamp Access Hole Cover

With the target, slide, and light source totally enclosed to prevent wear on moving parts, provision for easy changing of burned-out bulbs is required. This is possible by means of a removable plate covering the lamp compartment.

Marking Device

The Vertometer can be supplied from the factory with a marking device, if desired.

Light Intensifier

This Vertometer is equipped with a 3-way switch. The center position is OFF. LOW position provides normal illumination for measuring white lenses. HIGH position provides increased illumination for measuring absorptive lenses such as Ray-Ban® sunglass lenses.

3.0 Operation

With the Vertometer on a table or bench, in its intended place of use, tilt the instrument so that the operator can look into the eyepiece and manipulate the drums in a natural, comfortable position. It is not necessary to have the instrument in a darkened area of the room. The operator may even face an unshaded window.

Plug the instrument cord into a 120 volt AC outlet. The lamp is a G.E. No. 25S11/5C (25 watt, white inside coated) lamp. These lamps may be purchased locally.

Before using the marking device, install the roller and apply ink to the roller cover. If using the red stamp pad ink that is supplied with the Vertometer, apply it directly to the Roller Cover with a brush. Rotate the ink roller occasionally to provide a fresh surface for the inking pins.

Spilled or excess ink should be quickly wiped away with a cloth moistened with water. The tips of the marking pens should also be wiped occasionally to prevent ink build-up.

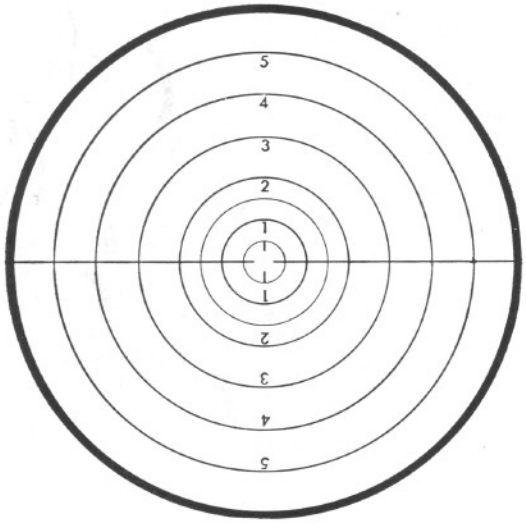

Fig. 3 Reticle

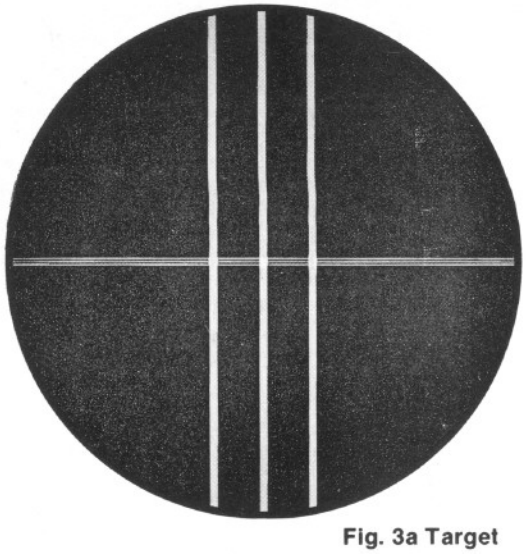

Fig. 3a Target

In using the Vertometer—or for that matter any monocular instrument—learn to keep both eyes open. Ignore what you see with the eye you're not using. You will find that the results you get with the instrument are consistently accurate, that you will get repetitive readings without fatigue if you learn to do this. Look into the eyepiece and focus the target, other eye closed. When you have the target in focus, open the other eye and try to keep seeing the target. When you lose it, close the one eye, get the target again, then open the closed eye. A few days practice will teach you to see the target with both eyes open, and you'll work faster, more accurately, more surely.

Focusing the Eyepiece

NEVER USE A VERTOMETER UNLESS YOU ARE CERTAIN THAT THE EYEPIECE IS IN ADJUSTMENT FOR YOUR EYE, AND THAT THE TARGET IS IN FOCUS WITH THE POWER DRUM AT ZERO.

This eyepiece adjustment must be made by each different individual user just as each individul must focus a telescope, or binocular, for his eyes. To adjust the eyepiece, proceed as follows:

1. Hold a piece of white paper between the lens stop and telescope objective in such a manner that the paper is well illuminated. Look into the eyepiece at the reticle. The lines on the reticle should be sharply in focus (See Fig. 3.) If they are not;
2. Blur the reticle lines by turning the knurled eye cap COUNTERCLOCKWISE. Then slowly turn the eyecap CLOCKWISE until the 1.00Δ circle of the reticle is sharply in focus. DO NOT TURN THE EYECAP BACK AND FORTH IN FOCUSING. Proceed only as detailed above.
3. Set the power drum at -1.00 or -2.00 diopters, snap the instrument light on, look into the eyepiece and rotate the power drum, topside toward you, until the target is in focus. The power drum should read zero. If it does not, repeat step two. Do not focus back and forth. This tends to stimulate accommodation and results in erroneous readings.
4. If other people will be using the Vertometer, be sure to note what eyepiece scale marking is aligned with the fiducial mark. This will make refocusing the Vertometer later a quick and easy operation.

Holding a Lens for Measurement

1. Place the concave, or back, surface of the lens against the lens stop.
2. If the lens is edged, or "laid out" for cutting, place the 180° line, or cutting line, coincident with the tips of the axis pins. Be sure that the center point of the lens is in the center of the lens stop.
3. If the lens is mounted, raise the lens table by turning the elevating knob until the table supports the bottom edge of the lenses or frame. In most cases the left temple will naturally position itself between the power drum and the lamphouse slide.
4. With the index finger of the free hand, release the lens holder by pressure toward the eyepiece. Swing the holder arm down and forward to hold the lens securely against the lens stop. Do not release the holder until the lens is held, or a broken lens will result.

Lens Analysis

(Refer to Figures 4, 4(a), 4(b)

1. With the lens in position rotate the power drum and the cylinder axis scale simultaneously until the target image, as seen through the eyepiece, is sharply defined. Make certain that the last focusing movement of the power drum is topside towards you.
2. If both the sphere target (triple narrow lines) and the cylinder target (three broad lines crossing the sphere target) are in focus at the same time, the lens has sphere power only and the power can be read at once on the power drum opposite the fixed index.
3. If the sphere target only or the cylinder target only comes into focus, the lens has cylinder power (plano cylinder or sphero cylinder). By turning the measuring drum you will find another position at sharp target lines can be seen. The prescription of any cylinder lens can be written in two forms—one with a plus cylinder and the other with a minus cylinder.

- When the power of the lens is desired in PLUS der cylinder form:

1. Set the power measuring drum at the lower (toward the minus end of the drum scale) of the two possible focusing positions and then rotate the cylinder axis drum until the sphere target is in focus and unbroken. This is the sphere power of the lens.
2. Rotate the power drum until the cylinder target is in focus. Be careful not to disturb the setting of the cylinder axis.

The plus cylinder power is the difference between the first and second powers indicated on the power drum. The location of the plus cylinder axis is given on the cylinder axis drum.

- When the power of the lens is desired in MINUS cylinder form:

1. Set the power measuring drum at the higher (toward the plus end of the scale) of the two positions at which sharp target lines are obtainable and rotate the cylinder axis drum until the sphere target is sharply defined and unbroken. This is the sphere power of the lens.
2. Rotate the power drum until the cylinder target is in focus. Be careful not to disturb the setting of the cylinder axis.
3. The minus cylinder power is the difference between the sphere power and the second power indicated on the drum. The location of the minus cylinder axis is given on the cylinder axis drum.

Lens Centering and Marking

The optical center position in a lens can be located and marked in the following manner:

1. With the lens clamped in position against the lens stop, shift the lens so that the center of the target is located at the intersection of the cross lines of the reticle. While shifting the lens into proper position, it is well to slightly release the pressure of the lens clamp.
2. Mark with the marking device. Three ink dots will appear on the lens. The center dot indicates the position of the optical center. All three dots indicate the 180° line of the lens, with axis as indicated by the setting of the cylinder axis scale.

To prevent a built-up of ink on the inker pins, wipe a film of light oil on the pin points, and sides, daily.

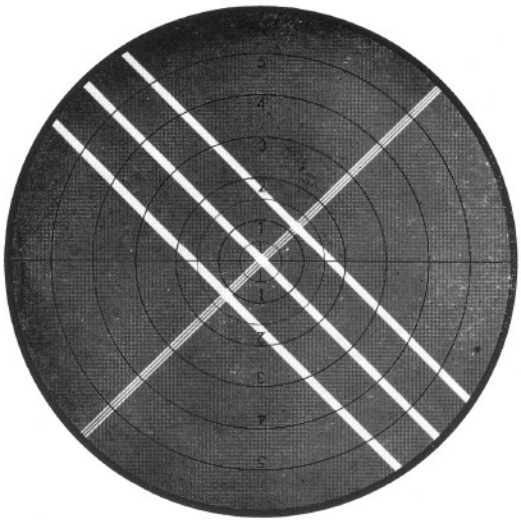

Fig. 4 Spherical Lens Target in Focus

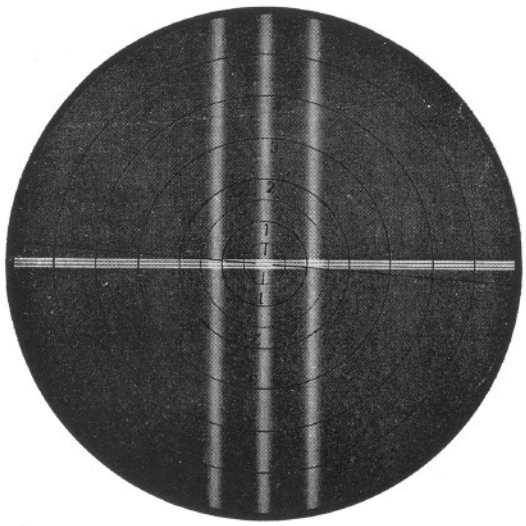

Fig. 4a Sphero Cylinder Lens Sphere Target in Focus Axis Correct

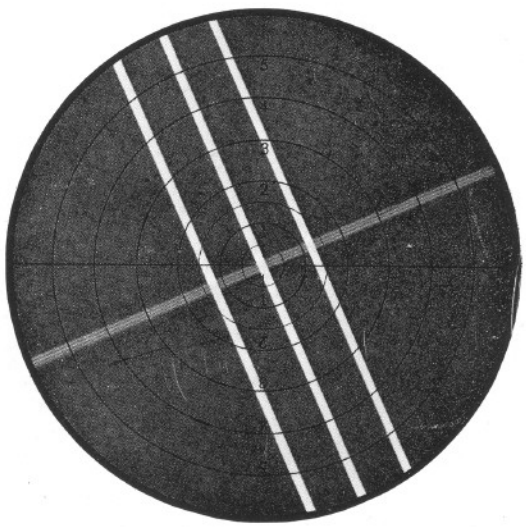

Fig. 4b Sphero Cylinder Lens Cylinder Target in Focus Axis Correct

Measuring Prismatic Power
(Refer to Figures 5 and 6)

1. Place a dot on the lens at the "optical center" position (the point at which the prismatic power is to be measured).
2. Place the lens in the instrument with the center dot in the center of the lens stop and the 180° line coincident with the tips of the axis marker pins. This position may be checked by the marking device.
3. Bring the target into focus as previously indicated for spheres or cylinders. Inasmuch as there is prism power in the lens, the target will be decentered. The target will always be displaced in the direction of the base of the prism; for example, if the lens has base up prism power, then the target will be displaced above the center of the reticle.
4. Rotate the prism scale until the cross-line of the reticle passes through the center of the target.
5. The amount of prism power in the lens is indicated by displacement of the target center with reference to the concentric circles of the reticle. Powers of 1.00 to 5.00 prism diopters are clearly indicated with numerical designation of each of the heavy concentric rings. (The two light rings indicate 0.50 and 1.50 prism diopters respectively.) Powers of 0.25 prism diopter can be estimated readily. The position of the prism base is indicated by the prism scale.
6. If the prism power exceeds 5.0 prism diopters, the target will be displaced beyond the concentric circles, and it will be necessary to bring the center of the target back inside the outermost circle in order to measure the prism power.

After rotating the prism scale until the cross-line of the reticle passes through the center of the target, place an auxiliary prism of sufficient power in the prism holder to bring the target back inside the outermost

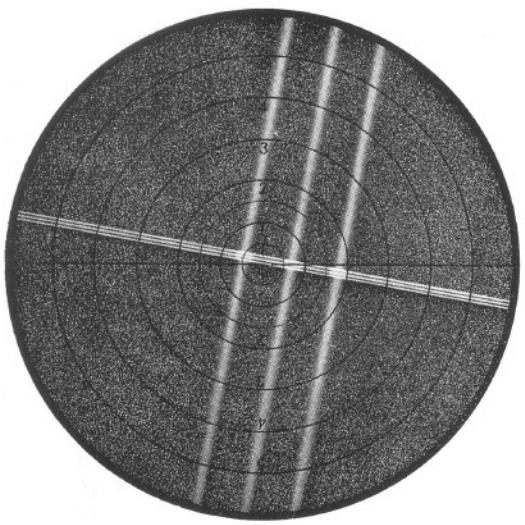

Fig. 5 Sphero Cylinder Lens
Sphere Target in Focus
Axis Correct
0.75 Base In For Right Lens
Or Out For Left Lens

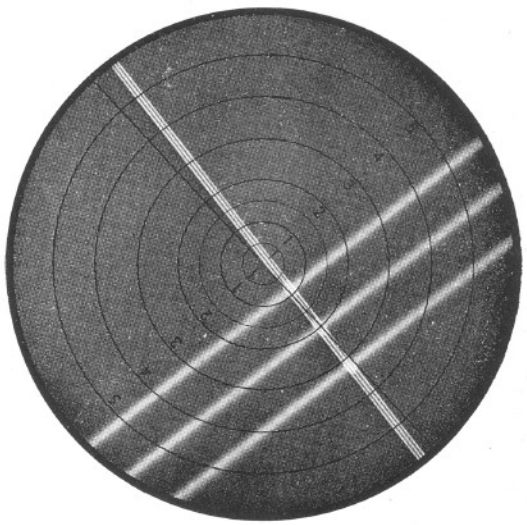

Fig. 6 Sphero Cylinder Lens
Sphere Target In Focus
Axis Correct
2.0 Base at 315°
Down And In For Right Eye
Down And Out For Left Eye

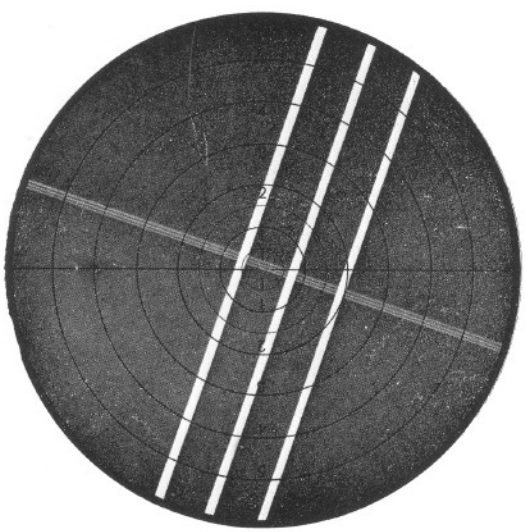

Fig. 5a Sphero Cylinder Lens
Cylinder Target in Focus
Axis Correct
Prism Same As Above

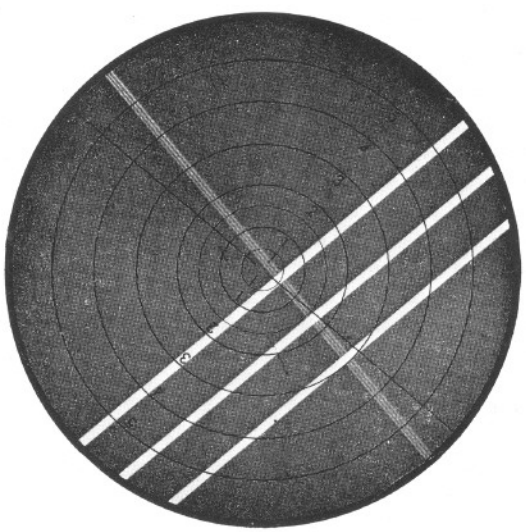

Fig. 6a Sphero Cylinder Lens
Cylinder Target In Focus
Axis Correct
Prism Same As Above

circle. Rotate the auxiliary prism in the prism holder until the center of the target, in its new position, is again intersected by the cross-line.

7. The amount of prism power in the lens is now indicated by the displacement of the target image with relation to the concentric circles plus the power of the auxiliary prism. Again, the position of the prism base is indicated by the prism scale.

Measuring Bifocal Additions

The bifocal addition equals the difference between the powers measured through the distance and reading portions of a bifocal lens, with the segment surface of the bifocal against the lens stop. Thus, when measuring the addition of a fused bifocal lens, place the lens in the Vertometer with the front, or convex, surface against the lens stop. When measuring the addition of a onepiece bifocal, place the lens in the Vertometer with the back, or concave surface against the lens stop.

To measure the addition of a bifocal lens:

1. Place the lens in the instrument with the segment surface against the lens stop.
2. Measure the power through the distance portion.
3. Move the lens and measure the power through the reading portion.
4. The true reading addition equals the difference between the powers measured through the distance and reading portions of the bifocal lens.

Because of prism encountered when measuring through the reading portion of a bifocal lens, horizontal lines of the target may appear blurred and fringed with color. To eliminate this, place in the prism holder an auxiliary prism of sufficient power to center the target image. Or, as you are interested only in the difference between the powers measured with the distance and reading portions, focus only on the vertical lines of the target image and disregard the blurred horizontal lines.

A method of measuring bifocal additions which may be used advantageously in routine laboratory procedure is as follows:

1. Place the lens in the instrument with the segment surface against the lens stop and the top line of the segment splitting the aperture of the lens stop.
2. Measure the power through the distance portion and through the near portion without moving the lens. Under these conditions the target image may be rather dim.
3. The reading addition equals the difference between the two powers measured above.

NOTE: Keep in mind that the power of the distance portion, or the back vertex power of the lens, must always be measured with the concave surface against the lens stop.

Measuring Vertical Prism Imbalance at Reading Level

The procedure for using the Vertometer to measure, at the reading level, the vertical prism imbalance between a pair of lenses is as follows:

1. Dot the normal reading position in both lenses.
2. Clamp the right lens in the Vertometer and center the dot on the lens stop.
3. Bring the target into focus and make a note of the amount and direction of base (up or down) of vertical prism shown. (Disregard any lateral prism.)
4. Repeat steps 2 and 3 with the left lens.
5. The prism imbalance is the difference between the prism values obtained if the direction of the prism is the same for both eyes.

   The values are added if the prism directions are opposite.

Laying Out Lenses for Edging

The Vertometer can be used to check the accuracy of the surfacing operations and at the same time mark the lens for edging. The procedure for performing the combined operations is as follows:

1 After dotting segment center and inspecting for physical defects clamp the lens in position in the Vertometer with the back surface against the lens stop.
2. Set the measuring drum at the sphere power indicated in the prescription.
3. Set cylinder axis scale at the prescribed axis.
4. Slowly rotate lens until sphere target is sharply defined and unbroken.
5. Shift lens until "sphere target" is centered on reticle. (If prism is specified in the prescription, the target should be decentered accordingly.) Check the sphere power.
6. Rotate the power drum until the "cylinder target" is in focus and then shift lens until "cylinder target" is properly positioned. Check cylinder power. As a final check, bring the "sphere target" into focus and make certain that it is in the correct position.
7. Dot the 180° line with the marking device and remove lens from Vertometer.
8. If the lens is single vision, the edging line can be drawn on the lens, using the three Vertometer dots for reference.

NOTE: Any distance decentration specified in the prescription must be considered when marking the edging center.

9. If lens is a bifocal, place it on a protractor with the three dots on line and check for segment location. If segment location is within tolerance then the edging line can be drawn from the three dots. (See note under 8 above.)

Wherever possible, moving parts in the Vertometer have been totally enclosed to keep out wear-producing abrasives. Keep the telescope objective and eyelens clean by wiping with a clean, soft cloth occasionally. Slip on the protective dust cover every night. Wipe and lightly oil the marking device axle and guide plunger occasionally to keep instrument at peak performance. Do not flood the exposed moving parts with oil. This only provides a vehicle for trapping dust and other abrasives to increase to increase wear. A light film on a clean surface is adequate.

If you use the red stamp pad ink supplied with the Vertometer, it is unnecessary to clean the inkwell. However, if you are using another type of marking ink, the inkwell should be cleaned at least every second day. The inkwell should be detached by loosening the holding thumb-screw and then lifting the inkwell up and off. The inkwell should then be thoroughly washed in water. If you spill ink on the Vertometer when you are filling the inkwell, wash it off immediately.



Fig. 7 Swing Lamp Out With Lever

Base

The instrument is hinged to the base by a bolt threaded into the base casting and fitted with a lock-nut. To tighten the joint (1) loosen the nut, (2) tighten the bolt by turning the left bolt head clockwise until the required tension is reached, (3) tighten the lock-nut. To relieve tension on the joint, simply turn the bolt head counterclockwise in step (2).

Lens Table

At the lower edge of the face plate, immediately below the center of the table, are two small head adjusting screws. By turning each of these two screws clockwise, the tension on the lens table elevating mechanism is increased. To loosen, turn the screws counterclockwise. In adjusting, try to turn each screw equally to maintain balanced tension on the shaft.

Light Source

To change bulb, set the power drum at about -17.00D. Lift off the access hole cover (See Figs. 1 and 7) and swing the bulb out by means of the lever visible in the access hole. Replace the bulb, swing it back into position and replace the access hole cover. The bulb may be purchased locally as G.E. No. 25S11/5C.

Inking Attachment

A clamp is attached to the inker shaft mount to control the drop of the inker arm. Its tightness is determined by adjustment of the slotted head screw at the open end of the clamp. The clamp is properly set when the inker arm is just prevented from dropping after being placed at a position halfway between the inking and marking positions. Use a screwdriver for this adjustment.

Target Slide

Pull the instrument plug from the outlet and turn the instrument, telescope end away from the operator. Tip the telescope end down. In this position the cover underside the rear of the instrument can be seen. Remove the cover screws, and the cover. In the space revealed will be seen part of the target slide spur gear, and on either side of it a screw. To tighten the target slide turn each of these two screws clockwise, equally. The right degree of tension can be determined by rotation of power drum while the adjustment is being made. Too much tension will result in difficult, or "sticky," starting in drum rotation. Replace cover when adjustment is finished.

Axis Drum

Looseness, or backlash, in this assembly may be removed as follows. With a screwdriver loosen the two machine screws, which can be seen immediately below the axis drum by turning each counterclockwise about one quarter turn. Using the hand against the axis drum, or the handle of the screwdriver on the casting behind the axis drum, gently tap the drum toward the rear of the instrument until the backlash is removed, and drum roation is free. Then retighten the two machine screws securely

If this adjustment is insufficient to remove gear backlash within ½°, or if drum rotates freely only at 90° and 180°, binding at in-between-axes, mitre gear replace-

ment is necessary. This replacement should not be attempted at field laboratory level.

Standard Lens and Target

The target image seen through the eyepiece should be centered with respect to the reticle and should remain centered as the cylinder axis drum is rotated. In event the target does not appear on center, the target or the standard lens, or both are out of alignment.

If the target center moves in a circle around the center of the reticle as the axis drum is rotated, the target is out of adjustment. If the target center is "off center" with respect to the reticle center, and rotates without changing position as the axis drum is turned, the standard lens is out of alignment. If the target is off center and rotates in a circle, both standard lens and target are out of alignment.

Usually the only adjustment necessary will be a standard lens adjustment. Never attempt target adjustment unless the above inspection conclusively demonstrates a need for target relocation.

Wrenches for No. 6 Allen set screws have been provided, as accessories, for adjustment of the standard lens and target. To adjust the standard lens, or target, observe the following sequence of steps. Remove the instrument cover casting. Turn the instrument light on since you will be making a mechanical-visual adjustment.

Standard Lens Adjustment

The standard lens mount is locked in place by means of three screws through a collar of the lens mount into the rear face of the standard lens support. It is further held by three No. 6 Allen head set screws recessed into the edge of the standard lens support. These three Allen screws, one on the topside of the support, the other two 120° either side the top, also provide for adjustment of the standard lens position. To make the standard lens adjustment:

1. Loosen the three screws holding the lens mount collar to the rear face of the lens support. This permits free adjustment of the lens mount within the support.
2. Insert the three No. 6 Allen wrenches into the No. 6 set screws holding the standard lens mount. Observe the target decentration through the eyepiece.
3. Shift the standard lens by alternately loosening one or two of the adjusting screws and tightening the opposing screw. To move the target down, loosen the top Allen screw and tighten the two bottom side Allen screws. To move target to the left, loosen the bottom side right Allen screw and tighten the bottom side left Allen screw.
4. When target is centered, Allen set screws should be snug. Tighten screws through collar and replace covers. Target should be centered in the reticle and should remain centered during rotation.

Target Adjustment

If the target moves in a circle around the center of the reticle:

1. Turn the axis drum until two of the four opposing Allen set screws holding the target mount are at axis 180°, and the target is displaced along the reticle 180° line, to right or left.
2. Insert a No. 6 Allen wrench in each of the two set screws. To move the target to the right, loosen the left Allen screw and tighten the right. Loosening the right screw and tightening the left moves the target to the left.
3. Shift the target, by means of the two pairs of opposed set screws, until it appears centered in the eyepiece as the target is rotated.

If the target is off center in the reticle, and moves in an off center circle:

1. Rotate axis drum until the center of the target appears at its nearest position to the reticle center.
2. Set the prism base-apex line in the reticle to pass through the center of the target image. Note, and remember, the amount of target de-centration.
3. Rotate the target 180°. This will put the target at its farthest position from center.
4. By alternately loosening the target positioning Allen set screws on one side and tightening those on the other side of the target mount, move target back one half the distance shift noted between steps 2 and 3, moving the target along the reticle base-apex line.
5. Rotate the target drum. The target should rotate about its own center, and no longer in a circle. If it continues to rotate in a small circle, repeat steps 1 through 5.
6. To bring the target center into coincidence with reticle center, after the target has been adjusted, adjust the standard lens.

Lens Stop

Purpose of this conical stop is to hold the lens-to-be-measured at the anterior principle focus of the standard lens. Since the focal length of the standard lens is short, small variations in the position of this stop make substantial differences in the power reading of the Vertometer. The stop position is carefully adjusted in assembly, and locked by means of a threaded lock ring. The adjustment should not be disturbed. However, should an occasion arise for adjustment due to loosening of the lock ring, proceed as follows:

1. Provide yourself with a Bausch & Lomb No. 21-65-77 Vertometer Test Lens Set. (See Fig. 8.)
2. Be sure the eyepiece is in adjustment for your eye.
3. Back off the lens stop retaining ring about two turns, insert the plus test lens and measure the power.
4. If the power measures strong, turn the lens stop clockwise, if weak, countercloockwise.
5. Repeat the measurement of the lens and adjustment of the stop until the power reading is right.
6. Measure the power of the minus test lens. The drum should read correct.y. If not, recheck your adjust-



Fig. 8 Test Lens Set

ment with the plus lens. If the plus lens still reads correctly, check zero reading with no lens. The power drum position may have changed. If so, reset power drum and repeat adjustment of lens stop until both plus and minus 12.00D test lens powers are properly measured.

7. Now check instrument with plus and minus 3.00D certified power lenses. If instrument has measured plus and minus 12.00D lenses properly, and does not measure the 3.00D lenses correctly, the mechanical parts are excessively worn in this most-used range, and the Vertometer needs factory repair.

Power and Axis Drums

Both these drums are securely held by two Allen head set screws. Neither should become loose. If, however, either loosens and shifts position, it is obvious that axis or power measurements will be incorrect. To adjust the axis drum:

1. Set cross hair in reticle at axis 180°, remove instrument cover casting, and set triple fine lines of target at 90° by turning axis drum.
2. Loosen two set screws holding axis drum. Hold target gear mount with right hand, watch target to keep it on axis, rotate target drum to read 180°.
3. Tighten two set screws in drum, replace covers. If the power drum becomes loose and slips, the zero reading, and all other readings will be off by the same amount and in the same direction.

To re-set the power drum:

1. Adjust the eyepiece for your eye, and focus the instrument to determine the amount of error at the zero position.
2. Remove instrument cover casting. Hold target slide when target is in sharp focus, loosen two Allen screws in the power drum hub, and rotate drum to index at zero.
3. Tighten hub set screws and re-check for sharp focus at zero drum reading.
4. Re-assemble covers.

Ink Pad Replacement
Cat. No. 21-65-78

Two extra ink pads are provided with the Vertometer. When it becomes necessary to replace the ink pad, follow these instructions:

1. Open the Inkwell and lift out the Inker Roller.
2. Remove the two spring clips holding the old pad and discard both the clips and the pad.
3. Wipe the Inker Roller clean.
4. Remove the pwper backing from the new pad by flexing it a few times and then peeling off the smooth paper from its adhesive surface.
5. Lay the new pad on a flat surface with the adhesive side up.
6. To fit the new pad on the roller, first carefully align the roller with one end of the pad then pressing firmly, roll the roller across the pad and wrap the pad around twice.
7. Slightly spread the new spring clips and slip them over each end of the pad. Position them about ⅜ of an inch in from each edge of the pad.
8. Replace the Inker Roller in the Inkwell. Make sure that the spring clips are not obstructing the Housing Holes which accept the marking pens. If they are, reposition them.

5.0 Accessories

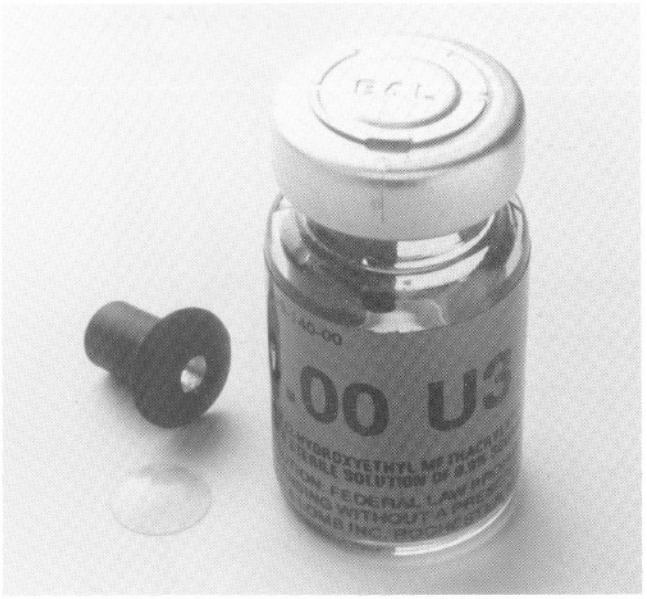

Fig. 9 The Contact Lens Accessory

Contact Lens Measuring Accessory, Cat. No. 21-65-89

The Contact Lens Measuring Accessory, Cat. 21-65-89 permits the convenient and accurate measurement of the lens power of contact lenses with the Vertometer. The Contact Lens Accessory, Fig. 9 is a tiny nylon tube with a glass insert of special index which moves the focal plane of the Vertometer objective forward.

In normal use, the Vertometer positions a lens with its vertex point against the lens stop. If a contact lens was held in this position, its vertex point would be displaced substantially from the lens stop, resulting in erroneous measurements. The Contact Lens Accessory optically compensates for this difference, assuring precise power measurements for all contact lense.

It is installed by inserting it in the aperture of the Lens Stop. The concave side of a contact lens is held against the spherical surface of the accessory, and measurements are made in the normal manner. The method of lens-holding eliminates the need for adhesives and the danger of bending or scratching the lens. Be sure to remove the accessory when measuring conventional eyeglass lenses.

The Contact Lens Measuring Accessory can be ordered through your Bausch & Lomb representative.

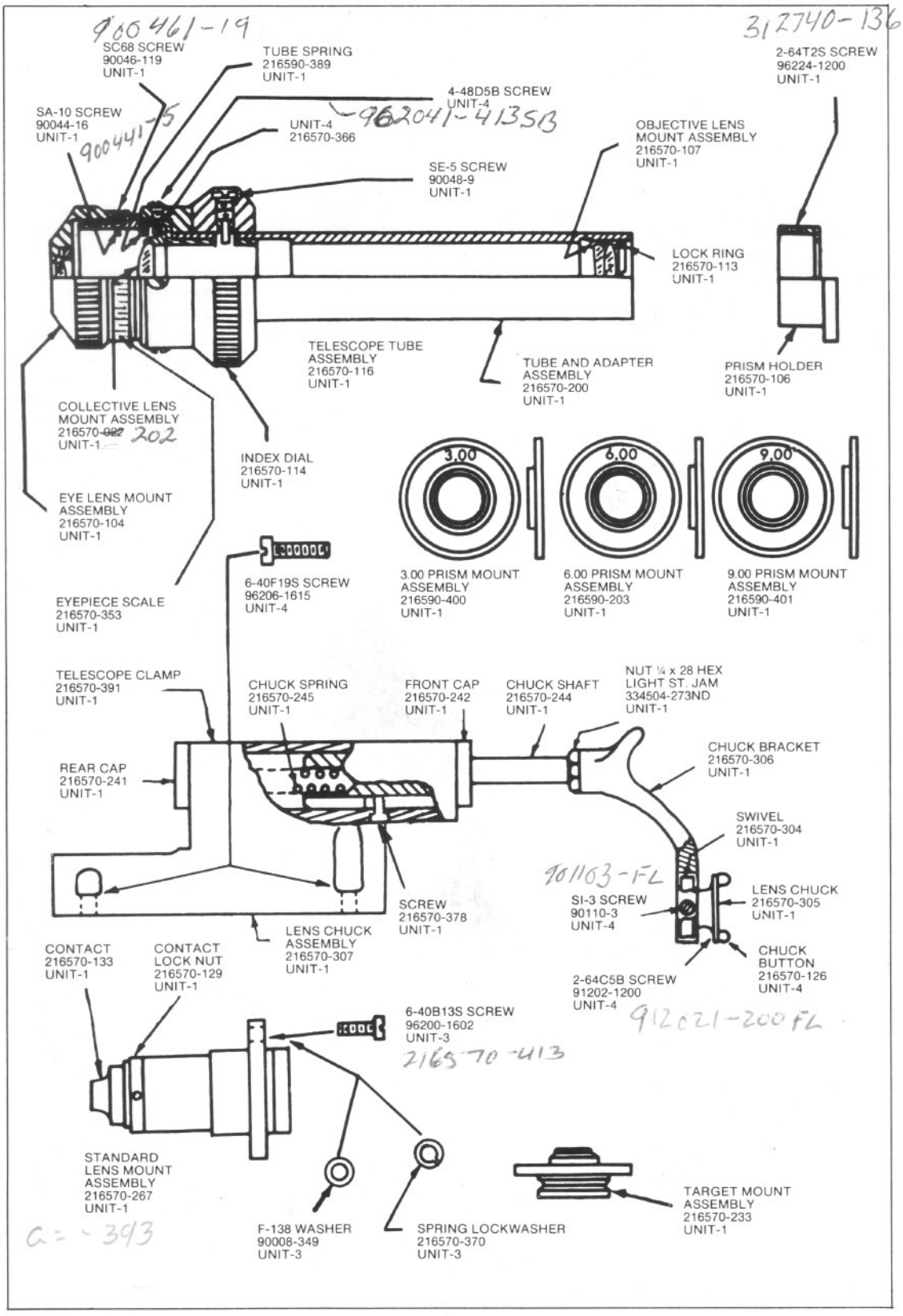

Fig. 10 Replacement Parts For The Bausch & Lomb Vertometer

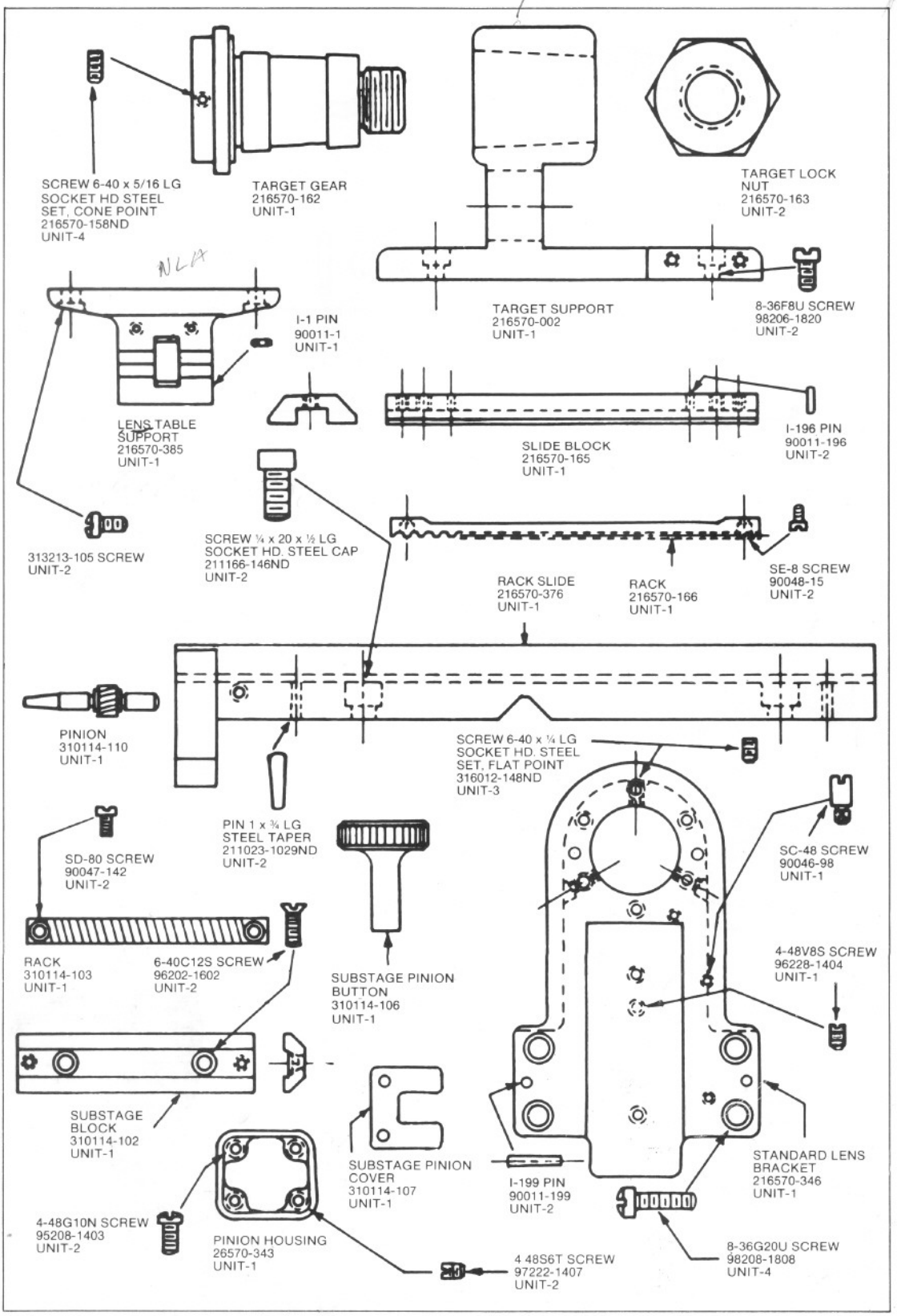

Fig. 11 Replacement Parts For The Bausch & Lomb Vertometer

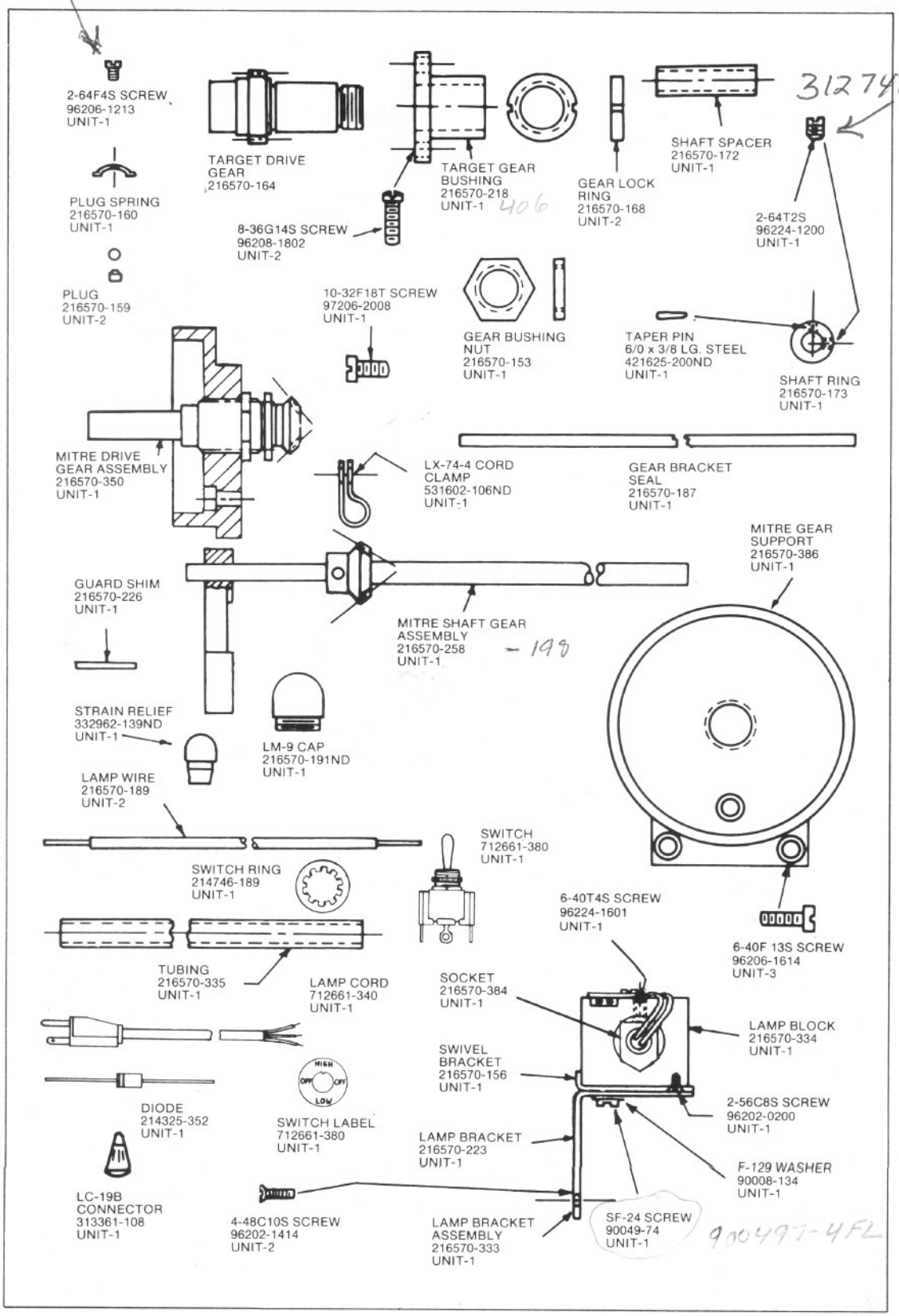

Fig. 12 Replacement Parts For The Bausch & Lomb Vertometer

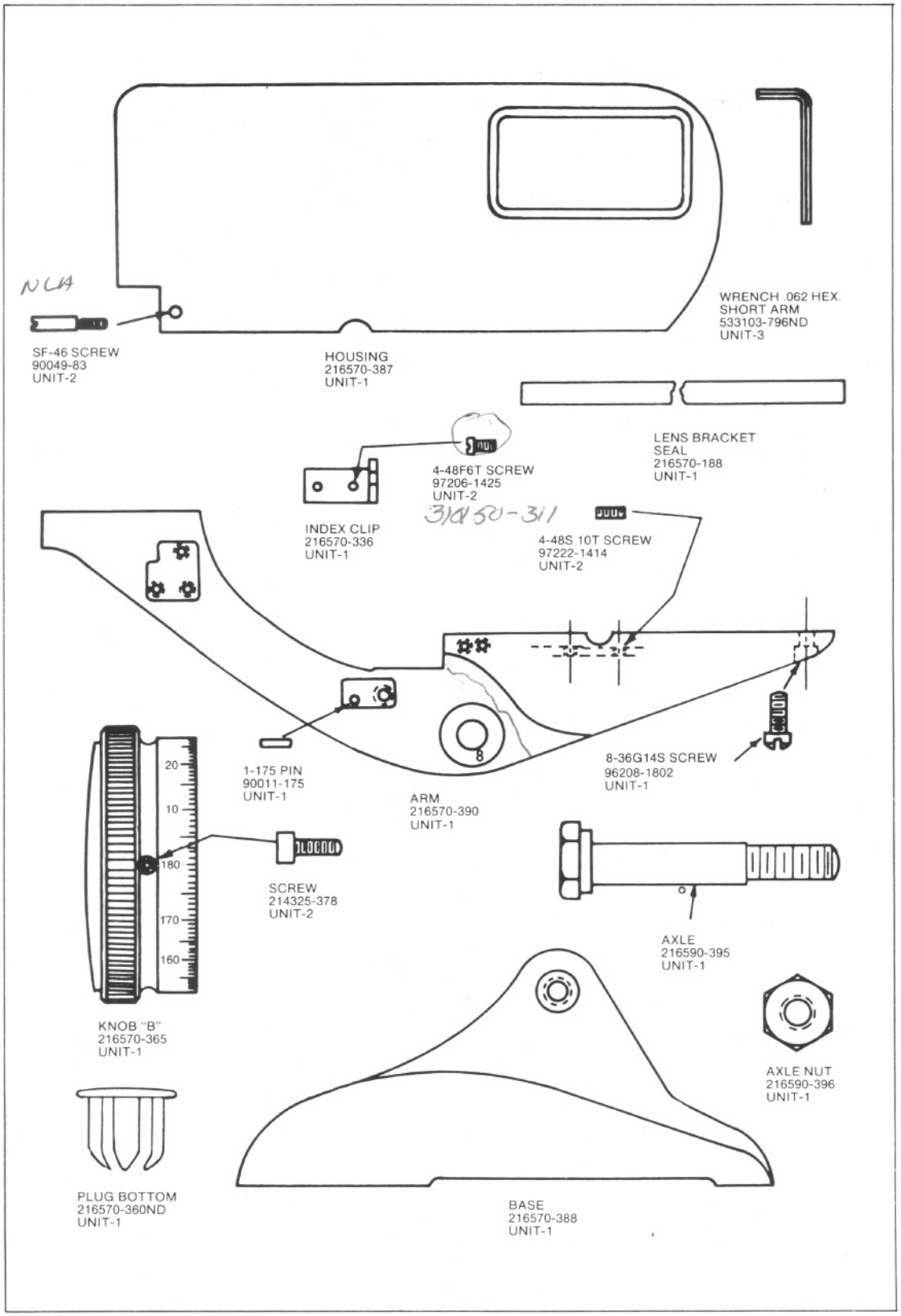

Fig. 13 Replacement Parts For The Bausch & Lomb Vertometer

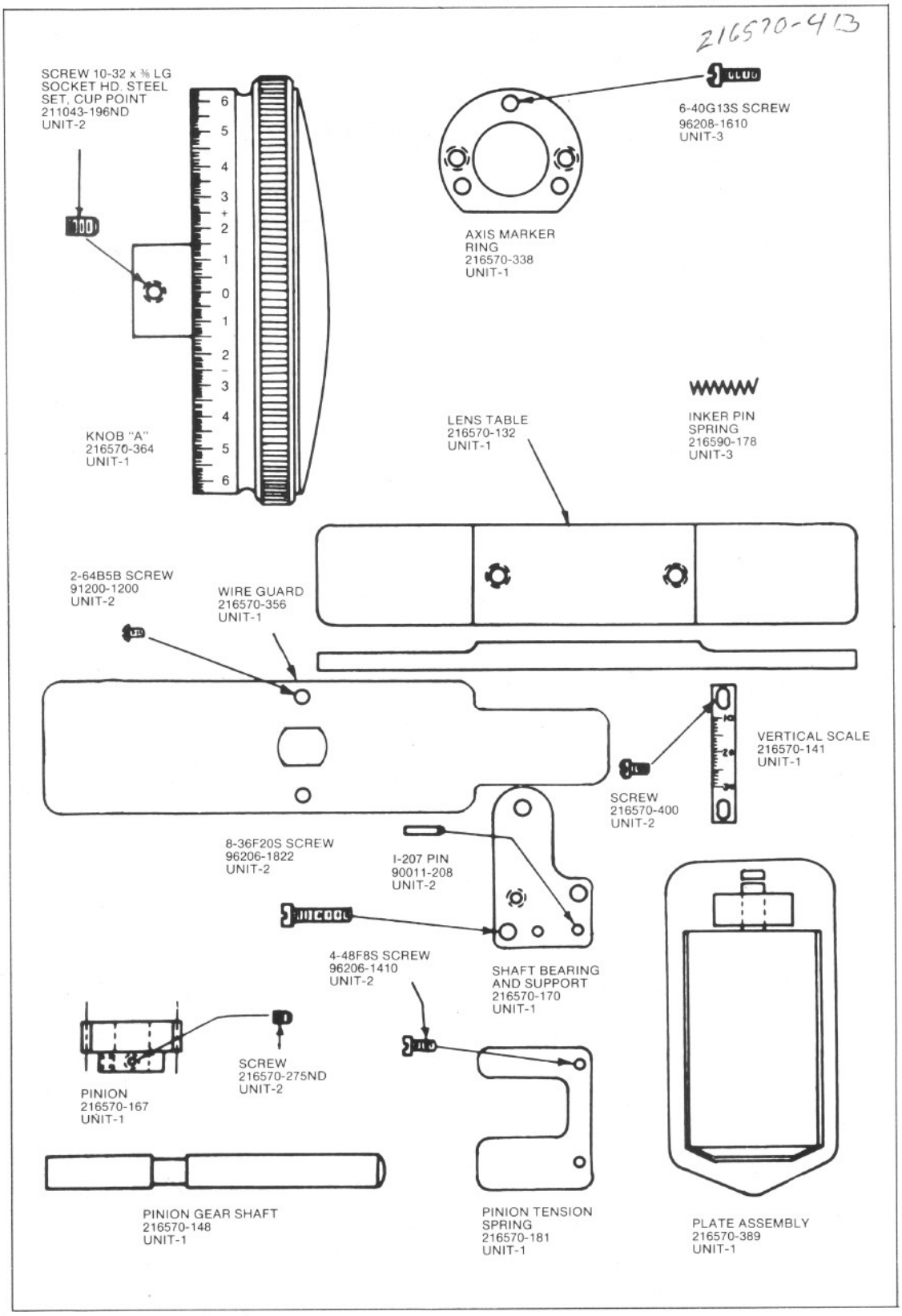

Fig. 14 Replacement Parts For The Bausch & Lomb Vertometer

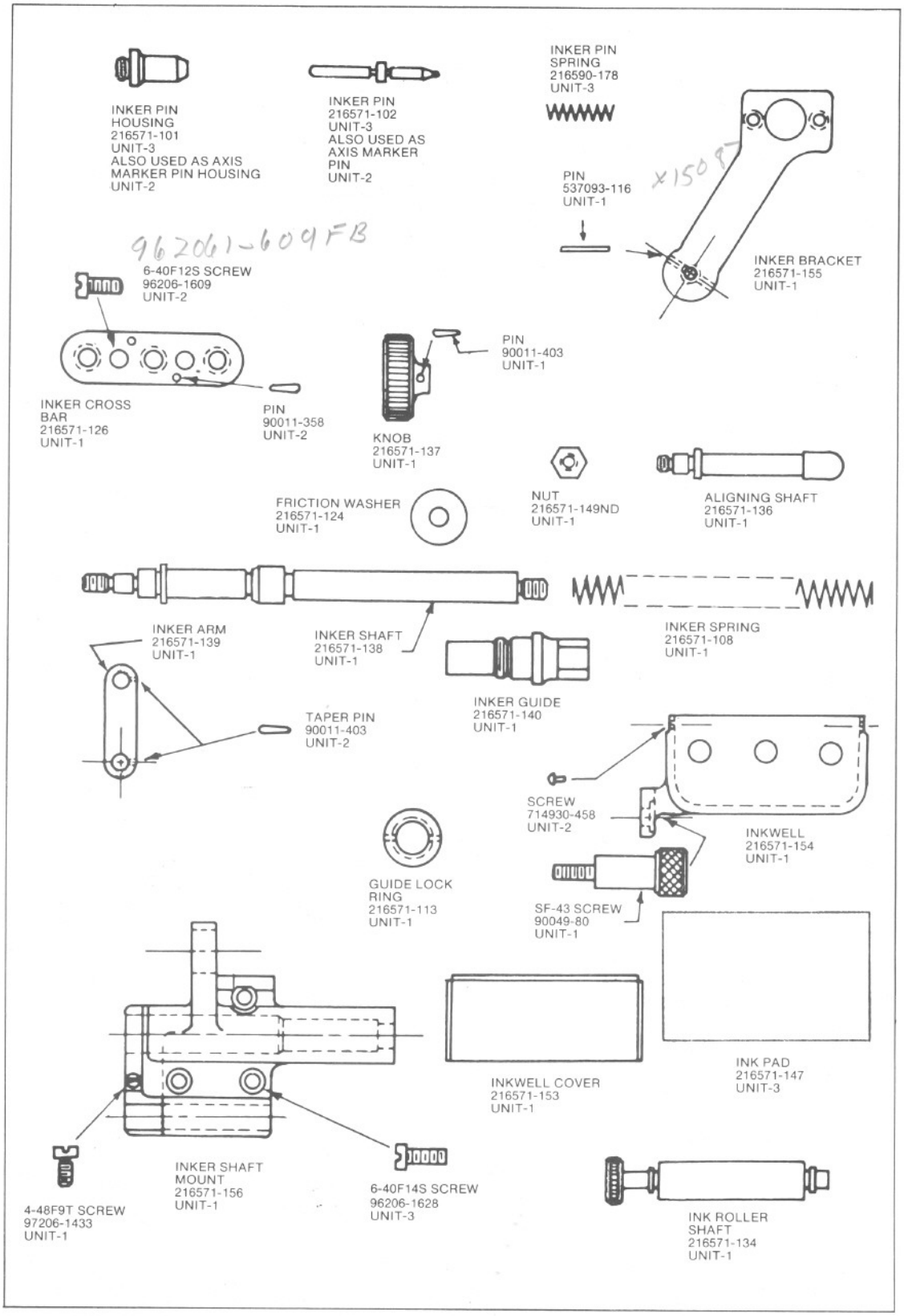

Fig. 15 Replacement Parts For The Bausch & Lomb Vertometer (Marking Device)

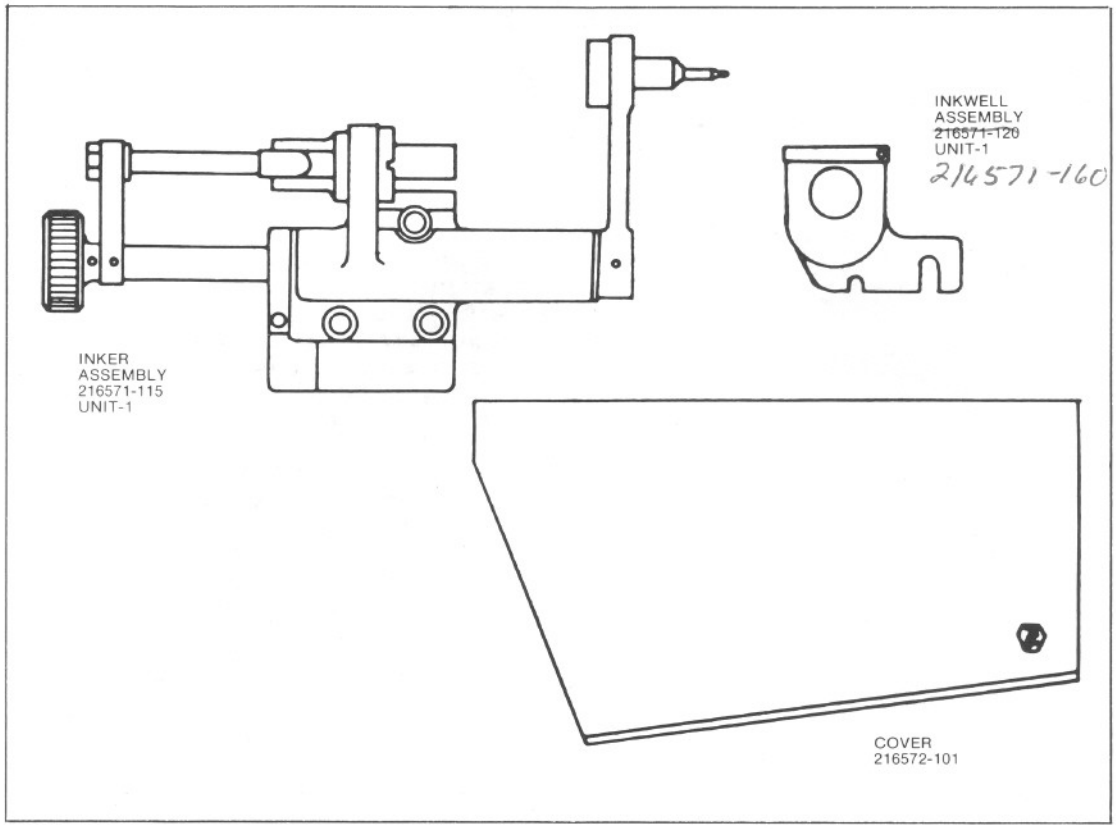

Fig. 16 Accessories Supplied With 21-65-70-01 Vertometer

