RK700

Auto Refractor • Keratometer

User’s Guide



Reichert
TECHNOLOGIES

©2010 Reichert Technologies. Reichert is a registered trademark of Reichert Technologies.
The information contained in this document was accurate at time of publication. Specifications subject to change without notice. Reichert reserves the right to make changes in the product described in this manual without notice and without incorporating those changes in any products already sold.

Federal law restricts this device to sale by or on the order of a physician.
ISO 9001 Certified – Reichert products are designed and manufactured under quality processes meeting ISO 9001 requirements.

No part of this publication may be reproduced, stored in a retrieval system, or transmitted in any form or by any means, electronic, mechanical, recording, or otherwise, without the prior written permission of Reichert.

Contents

Warnings & Cautions 4

Symbol Information 5

Introduction 6

Instrument Setup

- Unpacking Instructions 7
- Accessories 8
- Parts Identification 8
- Installation Instructions 9
- Icon Definition 10
- Default Settings 11
  - FUNCTION Setup 13
  - REF Setup 13
  - KRT Setup 13
  - SETTING Setup
  - OUTPUT Setup
  - OPTION Setup
- Joystick Settings 16

Instructions for Use

- Initialization 18
- Measurement Setup 19
- Measurement 19
- Printing Measurement Data 21
- Contact Lens - Base Curve Measurement 22

Maintenance

- External Cleaning 23
- LCD Cleaning 23
- Patient Window Cleaning 23
- Printer Paper Replacement 23
- Fuses 24

Troubleshooting 25

Classification 26

Guidance Tables 27-30

Appendix A - RS232 / USB Interface 31

Appendix B - Installation of PictureReceiver 32

Appendix C - General Specifications

- Specifications 35
- Disposal 35

Warranty 36

Warnings & Cautions

Reichert Technologies. (Reichert) is not responsible for the safety and reliability of this instrument when:

•Assembly, disassembly, repair, or modification is made by unauthorized dealers or persons
•Instrument is not used in accordance with this User's Guide.

WARNING:AN INSTRUCTION THAT DRAWS ATTENTION TO RISK OF INJURY OR DEATH.



WARNING: ANY REPAIR OR SERVICE TO THIS INSTRUMENT MUST BE PERFORMED BY EXPERIENCED PERSONNEL OR DEALERS THAT ARE TRAINED BY REICHERT SO THAT CORRECT OPERATION OF THE RK700 IS MAINTAINED.

WARNING: DO NOT REMOVE THE OUTSIDE COVERS OF THE UNIT OR ATTEMPT TO REPAIR ANY INTERNAL PARTS. REPAIR AND SERVICE OF THE UNIT MUST BE PERFORMED BY EXPERIENCED REICHERT PERSONNEL OR AUTHORIZED DISTRIBUTORS WHO ARE TRAINED BY REICHERT.

WARNING: THIS INSTRUMENT IS NOT SUITABLE FOR USE IN THE PRESENCE OF FLAMMABLE ANESTHETIC MIXTURES, SUCH AS OXYGEN OR NITROUS OXIDE.

CAUTION: AN INSTRUCTION THAT DRAWS ATTENTION TO RISK OF PRODUCT DAMAGE.



CAUTION: ENSURE THAT THE VOLTAGE APPLIED TO THE UNIT IS THE SAME AS THE VOLTAGE GIVEN ON THE DATA PLATE NEXT TO THE INPUT CORD RECEPTACLE, OR DAMAGE TO THE UNIT MAY OCCUR.

CAUTION: DO NOT USE SOLVENTS OR STRONG CLEANING SOLUTIONS ON ANY PART OF THIS INSTRUMENT AS DAMAGE TO THE UNIT MAY OCCUR.

CAUTION: USE OF ALCOHOL ON THE LIQUID CRYSTAL DISPLAY (LCD) MAY CAUSE DAMAGE TO THE DISPLAY.

CAUTION: THIS INSTRUMENT IS NOT SUITABLE FOR USE IN THE PRESENCE OF FLAMMABLE ANESTHETIC MIXTURES SUCH AS OXYGEN OR NITROUS OXIDE.

CAUTION: PORTABLE AND MOBILE RF COMMUNICATIONS EQUIPMENT CAN AFFECT MEDICAL ELECTRICAL EQUIPMENT.

CAUTION: THE INTERNAL CIRCUITRY OF THE INSTRUMENT CONTAINS ELECTROSTATIC DISCHARGE SENSITIVE DEVICES (ESDS) THAT MAY BE SENSITIVE TO STATIC CHARGES PRODUCED BY THE HUMAN BODY. DO NOT REMOVE THE COVERS OR DAMAGE TO THE UNIT MAY OCCUR.

CAUTION: THIS INSTRUMENT MUST BE PLUGGED INTO AN OUTLET WITH AN EARTH GROUND WHICH IS CONNECTED TO THE RECEPTACLE OR DAMAGE TO THE UNIT MAY OCCUR. DO NOT DISABLE OR REMOVE THE GROUND PIN.

CAUTION: DO NOT USE A POINTED OBJECT TO TOUCH THE LCD OR DAMAGE TO THE DISPLAY MAY RESULT.

Symbol Information

The following symbols appear on the instrument.

	Caution symbol indicating important operating and maintenance instructions that are included in this User's Guide
	Type B Product Classification Class 1 Equipment, Continuous Operation
	Alternating Current Power
	Protective Earth Connection
I O	ON / OFF
	Date of Manufacture
[REF]	Catalog Number
	Waste of Electrical and Electronic Equipment
CE 0120	Compliance to Medical Device Directive 93/42/EEC, respectively, as amended by 2007/47/EC.

Introduction

Congratulations on your purchase of the Reichert RK700 Auto Refractometer / Keratometer. The RK700 is an enhanced refractometer / keratometer used to measure objective refraction of the eye and allow for quicker subjective refraction results.

This User's Guide is designed as a training and reference manual. We recommend you carefully read and follow the steps in this guide to ensure optimum performance from your new instrument.

Please retain this guide for future reference and to share with other users. Additional copies can be obtained from your authorized Reichert dealer or contact our Customer Service department directly at the address on the back cover.

The customer service contact information is:
Tel:716-686-4500
Fax:716-686-4555
E-mail:info@reichert.com

Instrument Setup

Unpacking Instructions

Great care has been taken to deliver your new RK700 Auto Refractometer / Keratometer to you safely. Please read the User's Guide before operating the unit.

The instrument is packaged in a shipping container to protect the instrument from damage during shipment. Please remove the RK700 from the packaging material in the following manner. (Refer to Figures 1-1 through 1-3)

Note: Please retain the packaging so that if future transportation is required, the instrument can be sent in its original packaging.

1. Open the top of the outer box and then remove the top cover. (Refer to Figure 1-1)
2. Open the top of the inner box and remove the accessories from the RK700 shipping container. (Refer to Figure 1-2)
    - Dust Cover
    - User's Guide
    - Power cord
    - Accessories Box: (contains the following accessories)
        - Spare printer paper (2 rolls)
        - Reference Test Eye (with a contact lens holder)
        - Fuses (2 pcs.)
        - Chinrest Liners
        - Chinrest Pins

Note: If any of the above accessories are missing, immediately contact Reichert so that the missing accessories can be shipped.

3. Pull the inner box up and out of the outer box. (Refer to Figure 1-2)
4. Separate the foam packaging and remove the RK700 from its box. (Refer to Figure 1-3)
5. Lay the RK700 on its side and remove the tape from the bottom that secures the bag. Remove the bag.
6. Set the RK700 on a secure table.
7. Place the packing material in a safe place so that if transportation is required in the future, it will be available.
8. Continue to the next page of this manual.

Note: Upon repacking for transportation, the unit must be set to "package mode" prior to packing or it will not fit into its box for transportation. The "package mode" will make the unit more compact and stable for transportation.

The instrument is set to "package mode" when pressing the PRINT  and the CLEAR  buttons at the same time when the measurement screen is active.



Figure 1-1, Shipping Container



Figure 1-2, Shipping Accessories



Figure 1-3, RK700 Removal

Instrument Setup (Continued)

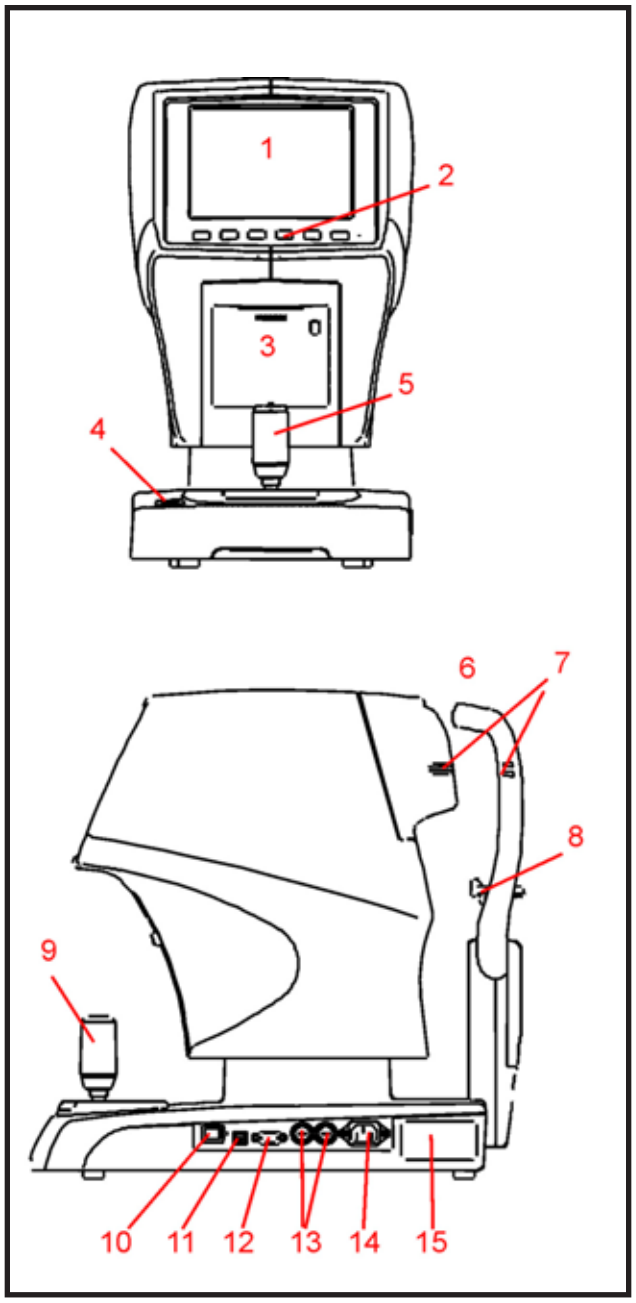

Figure 1-4, Parts Identification

Parts Identification

1. Operator Display: LCD Display that displays measurement data.
2. Display Buttons: Push Buttons that activate information on the LCD Screen.
3. Printer Door: Door (push to open) to access printer paper.
4. Chinrest Switch: Alignment mechanism that moves Chinrest up or down.
5. Joystick: Device for aligning the instrument to the patient.
6. Forehead Rest: Alignment mechanism that moves right/left for correct patient positioning.
7. Canthus Alignment Marks (right and left side): Alignment mark that indicates the vertical position of the center of the patient's eye.
8. Chinrest: Vertically Adjustable reference point for the patient's chin.
9. Measurement Start Switch: Switch to acquire manual mode measurements.
10. ON/OFF Switch: Switch that controls input power to the unit. "O" indicates OFF, and " | " indicates "ON."
11. USB Port: Communication port that transfers printer data.
12. RS232 Port: Communication port to the RS232 port on a computer.
13. Fuse Holders: Receptacle for input power fuses.
14. Main Power Connector and Fuse Holder: Connection point for input power and the fuses. Press the top tab and bottom tab together on the fuse panel to remove the fuse holder and fuses. Located on underside of unit.
15. Dataplate: Information plate providing manufacture's data.

Accessories

To order any of these accessories, contact your local authorized Reichert dealer.

Description	Reichert P/N
Printer Paper	12441
Dust Cover	15030-003
Verification Eye	15030-002
Power Cord	WCBL10018
Chin Rest Liners	15030-008
Chin Rest Pins	15030-009
Fuses	RFAG20065

Instrument Setup (Continued)

Installation Instructions

CAUTION: ENSURE THAT THE VOLTAGE APPLIED TO THE UNIT IS THE SAME AS THE VOLTAGE THAT IS INDICATED ON THE DATA PLATE NEXT TO THE INPUT CORD RECEPTACLE OR DAMAGE TO THE UNIT MAY OCCUR.

1. Install the printer paper in the instrument. Refer to the *Maintenance* section of this manual.
2. Install the Chinrest Liners onto the Chinrest and secure them with the Chinrest Pins.

Note: For sanitary reasons it is recommended to dispose of the top Chinrest Liner after every patient.

   a. Remove the Chinrest Liners and the Chinrest Liner Pins from their packages.
   b. Place the Chinrest Liner Pins into their associated holes in the Chinrest Liners and align the pins over the holes in the Chinrest.
   c. Push the Chinrest Liner Pins into the Chinrest holes to secure the Chinrest Liners.
   d. For sanitary reasons remove the top liner and discard it.

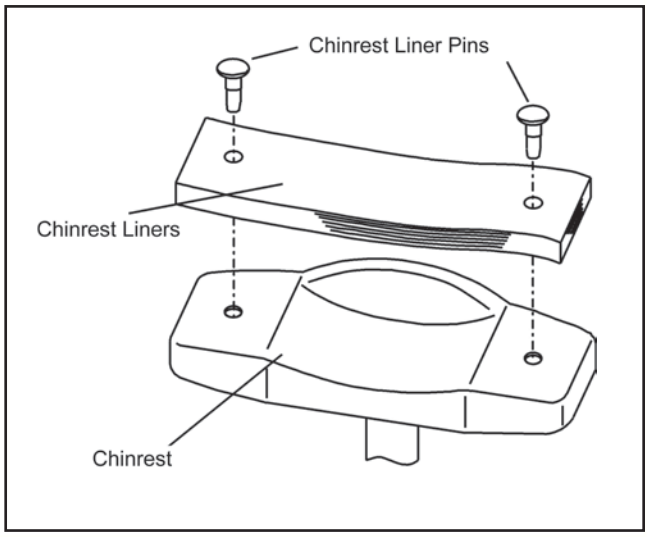

Figure 1-5, Chinrest Liner Installation

3. Install the RK700 in a secure location so that it is operating according to the specifications shown in the *General Specifications* section of this manual.

Note: Ensure that the power source applied to the RK700 is within the parameters provided on the Data Plate.

4. Attach the Power Cord to the Main Power Connector and press down on the "|" side of the ON/OFF Switch.
5. Press the button below the SETUP menu button and set the default settings to customize the unit as needed. Refer to subsequent pages for SETUP mode options.

Instrument Setup (Continued)

Icon Definition

The RK700 incorporates a user-friendly icon/menu-based operating system that will increase the speed of measurements, training and use. Below are the Icons that are used during the operation of this instrument.

	**CLEAR**:	Clear all measurement data.
	**AUTO**:	Auto-alignment mode selection. (Auto or Manual)
	**IOL**:	IOL measurement mode selection. (ON or OFF)
	**MEASURE**	Measurement mode selection. (KR, R, K, PK, or anterior eye picture)
	**SETUP**: Note:	Change to Setup screen. If this button is depressed for 3 seconds, the Setup menu screen will disappear and the icon will be blank. When the icon is blank, the SETTING/START option is active for selection of either Auto-Quick, AUTO, or MANUAL.
	**PRINT**:	Print measurement results.

Instrument Setup (Continued)

Default Settings

The RK700 has default settings that are set at the factory. A summary of these settings is given on the next page. A detailed definition/explanation of each setting is given on pages 13-17.
The following steps provide the details on how to customize the default settings.

Note: Default settings are shown in Bold type. LCD Display: Green = ON, Grey = OFF

How to Customize:
1. Touch the screen on the SETUP icon.
2. Touch the screen on the UP/DOWN arrows icon to choose the appropriate setup category (e.g., Printout Setup).
3. Touch the screen on the RETURN icon to display the parameters and settings of the setup categories.
4. Touch the screen on the UP/DOWN arrows icon to move the cursor box to the desired parameter.
5. Touch the screen on the appropriate RIGHT/LEFT arrows icon to move the cursor box to the desired setting for the parameter.
6. Touch the screen on the RETURN icon to activate the highlighted setting.
7. Touch the screen on the EXIT icon to step back through the previous menus until the Main Menu is shown.

CAUTION: Do not use a pointed object to touch the LCD or damage to the display may result.

The icons below are shown in the SETUP menu screens and have the following definitions.

Icon	Icon Description	
	LEFT:	Move Left
	RIGHT:	Move Right
	PLUS:	Increment a number
	UP	Move up in the menu screen.
	DOWN:	Move down in the menu screen.
	RETURN:	Select the Active Option
	EXIT:	Exit the Current Screen.

Instrument Setup (Continued)

Default Settings (Continued)

This instrument is sent from the factory with measurement, printer, communication, and miscellaneous parameters set to default values. These settings can be changed to suit the needs of the individual operator/clinician. A summary of the factory default settings is given below with the default selections shown in bold type. To customize these settings, follow the steps given on the subsequent pages. (Refer to Figures 1-1 through 1-15)

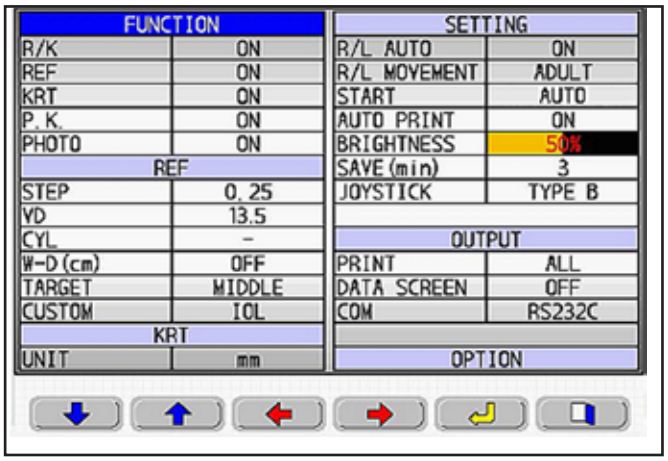

Figure 1-6, Default Settings

Customized Options

FUNCTION:								
R/K	**ON**	OFF						
REF	**ON**	OFF						
KRT	**ON**	OFF						
PK	**ON**	OFF						
PHOTO	**ON**	OFF						
REF:								
STEP	**0.25**	0.12	VD	0	10	12	**13.5**	15
CYL	**–**	+	+ / –					
W-D (cm)	**OFF**	30	40	50				
TARGET	BRIGHT	**MIDDLE**	DARK					
CUSTOM	**IOL**	FL / CL						
KRT:								
UNIT	**mm**	–D	+D					
SETTING:								
R/L AUTO	OFF	**ON**						
R/L MOVEMENT	**ADULT**	CHILD						
START	Auto-Quick	AUTO	MANUAL					
AUTO PRINT	OFF	**ON**						
BRIGHTNESS		50%						
SAVE (min)	OFF	3	5	10				
JOYSTICK	TYPE A	TYPE B						
OUTPUT:								
PRINT	**ALL**	ECO	OFF					
DATA SCREEN	**OFF**	ON						
COM	**RS232C**	USB						
BAUDRATE	**115200**	921600						
CHARACTER	8	8						
PARITY	NONE	NONE						
STOP BIT	1	1						
OPTION:								
BUZZER	**ON**	OFF						
REST	ON	**OFF**						
DATE FORM INPUT	YMD	DMY	**MDY**					
MESSAGE INPUT	**ON**	OFF						
LANGUAGE	**ENG**	JPN						
NUMBER								
SET	**0**0000	RESET						
PRINT	**OFF**	ON						
DISPLAY	**OFF**	ON						

Instrument Setup (Continued)

Default Settings (Continued)

Function Setup

- R/K — Select the refractive/keratometry measurement mode ON or OFF.
- REF — Select the refractive measurement mode ON or OFF.
- KRT — Select the keratometry measurement mode ON or OFF.
- P.K. — Select the corneal-peripheral curvature radius measurement mode ON or OFF.
- PHOTO — Select the anterior eye color shooting mode only ON or OFF.

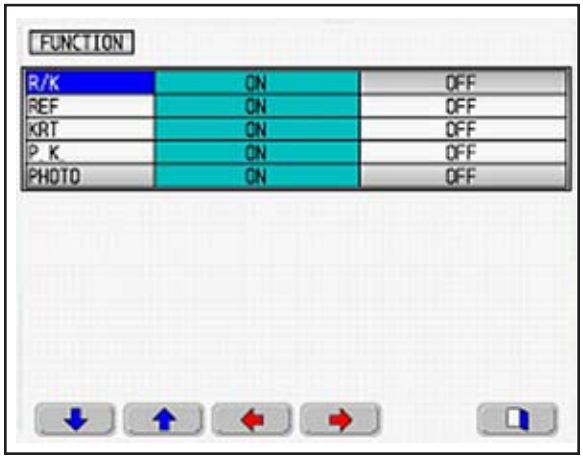

Figure 1-7, Function Setup

REF Setup

- STEP — Select the increment for refractive measurement.
- VD — Select default corneal vertex distance.
- CYL — Select cylinder format (-, +, or -/+).
- W-D(cm) — Set the working distance. When measuring with this item set, near pupil distance is automatically computed to indicate it as NPD on the screen and the printout.
- TARGET — Set brightness of the target.
  - MIDDLE: Normal setting.
  - BRIGHT: Brighten the target.
  - DARK: Darken the target.
- CUSTOM — Select the function of the Custom switch to either IOL or FL/CL.
  - IOL: Enable the intraocular lens mode ON or OFF.
  - FL/CL: Enable switching the vertex distance (VD=12 / VD=0).

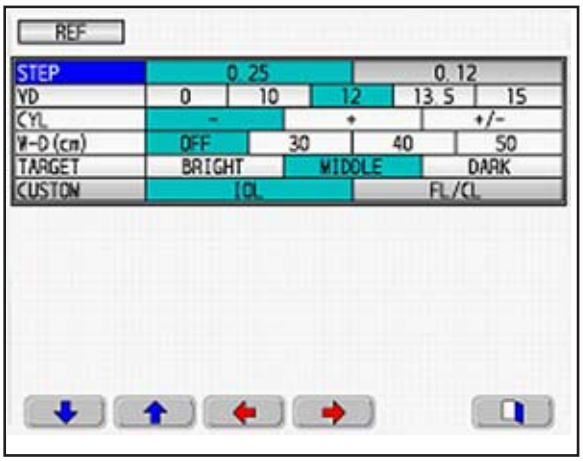

Figure 1-8, REF Setup

KRT Setup

- UNIT — Select the indication unit of keratometry measurement.
  - mm: Corneal curvature radius.
  - –D: Corneal refractive (-).
  - +D: Corneal refractive (+).

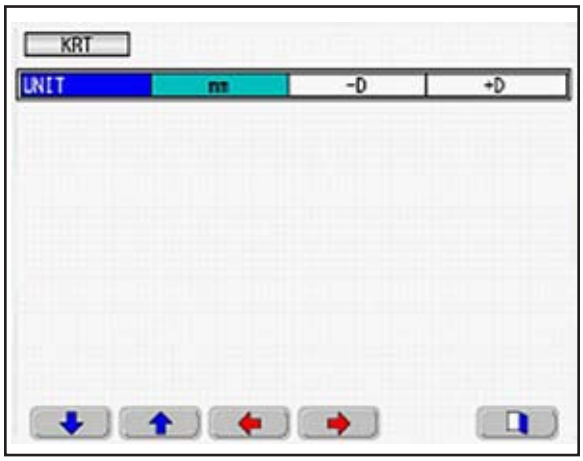

Figure 1-9, KRT Setup

Instrument Setup (Continued)

Default Settings (Continued)

SETTING Setup:

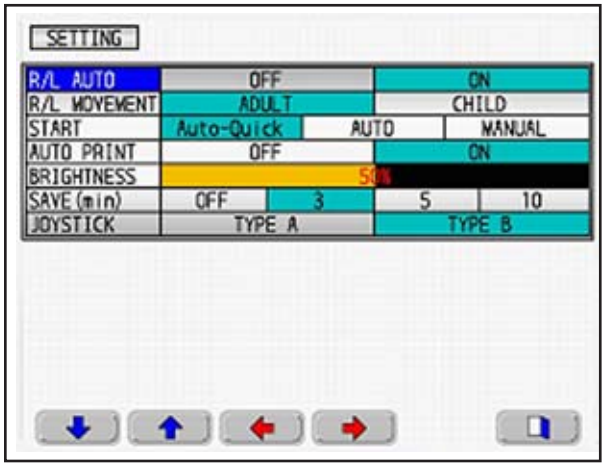

Figure 1-10, Setting Setup

- R/L AUTO: Selects automatically moving between right and left eyes.
  - OFF: Cancel the auto-switching function of right and left eyes.
  - ON: Activate the auto-switching function of right and left eyes.

- R/L MOVEMENT: Set the movement distance of the measurement unit when R/L AUTO function is ON.
  - ADULT: If the examinee is an adult.
  - CHILD: If the examinee is a child.

- START: Set the measurement start mode.
  - MANUAL: When instrument is aligned in front of the patient, the instrument will initiate one keratometry measurement and one refractive measurement when the Measurement Start Switch on top of the Joystick is pressed.
  - AUTOQ: When instrument is aligned in front of the patient and the Measurement Start Switch on the top of the Joystick is pressed, the instrument will automatically initiate one keratometry measurement and three refractive measurements.
  - AUTO: When instrument is aligned in front of the patient and the Measurement Start Switch on the top of the Joystick is pressed, the instrument will automatically initiate three keratometry measurements and three refractive measurements.

- AUTO PRINT: Select the automatic print function ON or OFF.
  - OFF: Cancels the auto-print function.
  - ON: Activates the auto-print function.

- BRIGHTNESS: Adjust/change the brightness of the LCD monitor.

- SAVE(min) Select inactivity time for sleep mode. (units are in minutes)

- JOYSTICK Change the movement of the unit with the joystick.
  - TYPE A: The roller on the top of the joystick moves the unit back and forth. The joystick back and forth movement moves the unit up and down.
  - TYPE B: The roller on the top of the joystick moves the unit up and down. The joystick back and forth movement moves the unit back and forth.

Instrument Setup (Continued)

Default Settings (Continued)

OUTPUT Setup

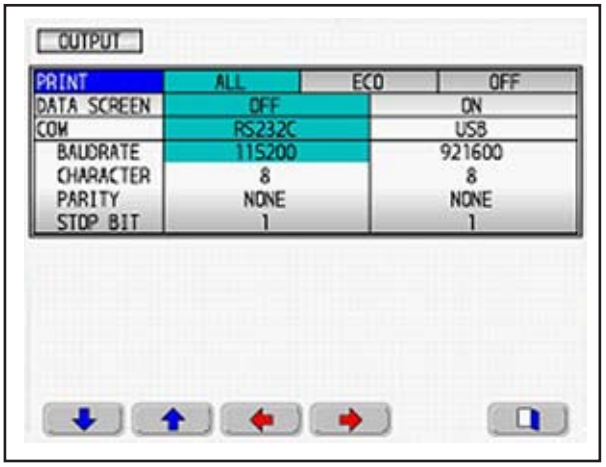

Figure 1-11, Output Setup

- PRINT: Select the format of the print out.
  - ALL: All measurement data is printed out. (Only prints out a maximum of 10 refractive measurements.)
  - ECO: Prints only the average values.
  - OFF: Stops print out.
- DATA: Display the measurement results on the LCD screen. To exit this mode, press down on the roller at the top of the joystick.
- COM Set the output mode of the port. Set the output content of the communication parameter to the external PC.

Note: The only setting in this category that is selectable is the RS232 baud rate. (e.g., 9600, 38400, or 115200) Character, Parity and Stop Bit cannot be changed. The USB settings cannot be changed.

Note: Refer to Appendix A for connection details.

OPTION Setup

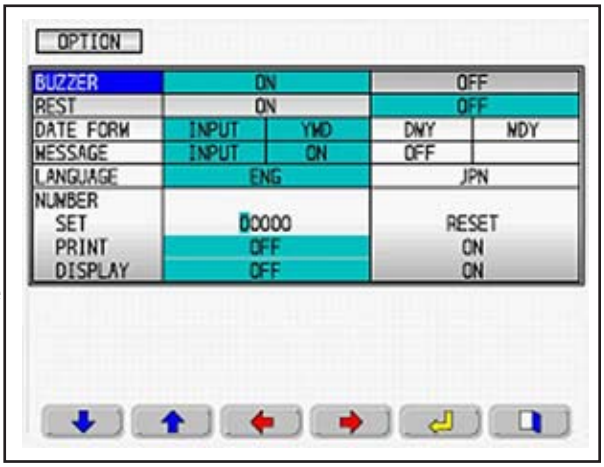

Figure 1-12, Option Setup

- BUZZER Set the buzzer ON or OFF. (Active when going to the sleep mode.)
  - ON: Set the buzzer sound ON.
  - OFF: Set the buzzer sound OFF.
- REST Selects if the residual astigmatism is printed.
  - ON: Residual astigmatism is shown on the printer paper.
  - OFF: Residual astigmatism is not shown on the printer paper.
- DATE FORM Set the date format.
  - YMD: Year/Month/Day
  - DMY: Day/Month/Year
  - MDY: Month/Day/Year
- MESSAGE Set the input and output message. (Refer to the next page.)
- LANGUAGE Select the preferred language (ENG or JPN).
- NUMBER Set the input and output of the examinee number. (Refer to the next page.)

Instrument Setup (Continued)

Default Settings (Continued)

OPTION Setup (Continued)

• Message Setup: This function can print out programmed messages of 22 characters on 2 lines.

<— Left Arrow: The left arrow above the left button moves the cursor to the left and highlights the letters, numbers, or symbols for entering the practice name.

—> Right Arrow: The right arrow above the second from the left button moves the cursor to the right and highlights the letters, numbers, or symbols for entering the practice name.

> The greater than symbol moves the cursor in the practice name text box only to the right.

Set: Transfers the selected letter into the practice name text box .

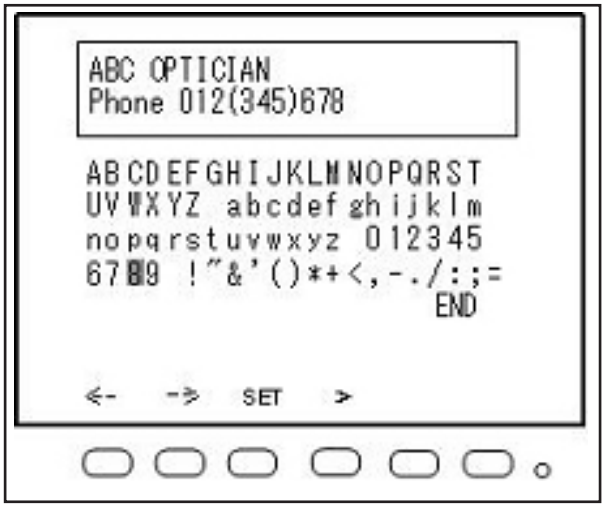

Figure 1-13, Option Setup - Message

Note: When selecting this menu, the message input screen will contain a cursor that is used to change the letters or numbers.

Note: When the setting is completed, move the Right Arrow (or Left Arrow) until the word 'END' is highlighted and then press the "Set" button to save the information and go back to the menu screen. It will then appear on each printer output.

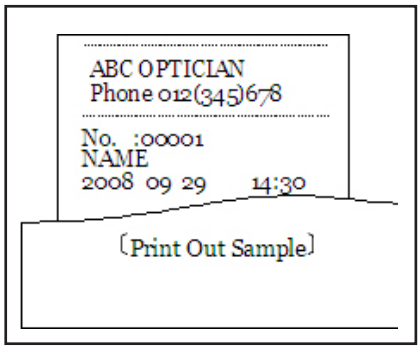

Figure 1-14, Printer Output

• Number Setup: This function sets or changes the number of the examinee, selects whether the number is displayed on the screen, and selects if the number is displayed on the printer paper.

Set: Sets or changes the number of the examinee.

Print: Sets if the printer displays the number of the examinee.
OFF = Number is not on the printer paper.
ON = Number is on the printer paper.

Display: Sets if the LCD displays the number of the examinee.
OFF = Display does not show the number.
ON = Display shows the number.

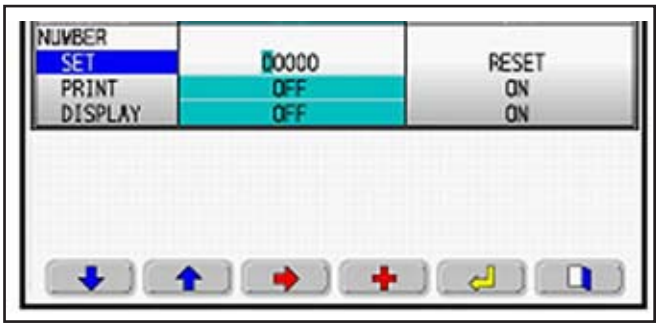

Figure 1-15, Number Setup

Note: When setting the number of the examinee, press the buttons below the right arrow and the "+" icons to change it to the desired number, then press the button below the RETURN icon to save the number.

Instrument Setup (Continued)

Joystick Settings

This instrument is sent from the factory with two joystick options for positioning the instrument in front of the patient. This option can be changed in the SETUP / SETTING menu screen. The Joystick has the following settings: (Refer to Figures 1-16 and 1-17)

Operating Instruction of a Joystick - TYPE A:

- When moving the joystick back, the measurement head moves down.
- When moving the joystick forward, the measurement head moves up.
- When moving the joystick to the right or the left, the measurement head moves to the right or the left (respectively).
- When rotating the roller on the top of the joystick toward the back, the measurement head moves back.
- When rotating the roller on the top of the joystick forward, the measurement head moves forward.

Note: The measurement will be started when the measurement button is pressed down.

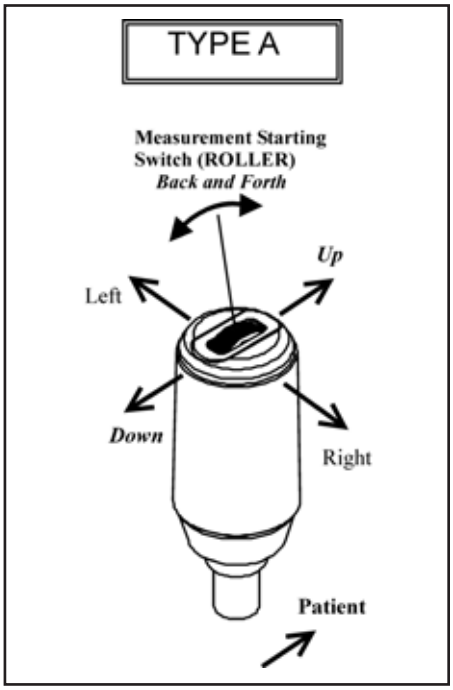

Figure 1-16, Type A Joystick

Operating Instruction of a Joystick - TYPE B:

- When moving the joystick back, the measurement head moves back.
- When moving the joystick forward, the measurement head moves forward.
- When moving the joystick to the right or the left, the measurement head moves to the right or the left (respectively).
- When rotating the roller on the top of the joystick toward the back, the measurement head moves down.
- When rotating the roller on the top of the joystick forward, the measurement head moves up.

Note: The measurement will be started when the measurement button is pressed down.

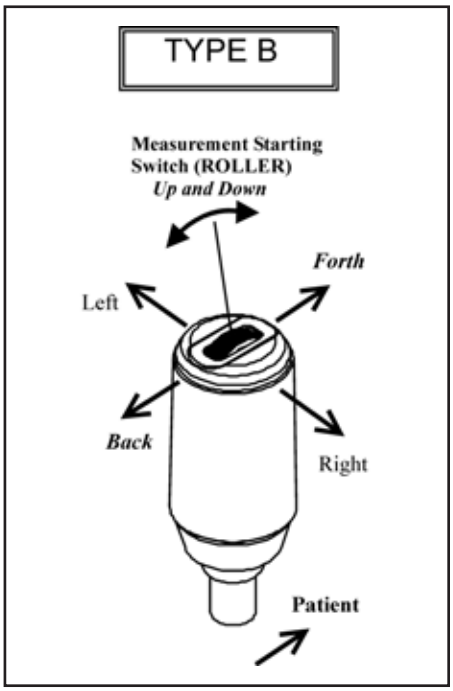

Figure 1-17, Type B Joystick

Instructions For Use

Initialization

When power is applied to the RK700, it will initially perform a calibration check. After completion of the calibration, the following title screen will be displayed.



Figure 2-1, Initial Screen

The unit will then display the following measurement screen and be ready to take a measurement.



Figure 2-2, Measure Screen

Instructions For Use (Continued)

Measurement Setup

When the instrument is ready to take a reading, it is important that the instrument is set to the preferred preferences of the practice before the measurement process is started or it may be necessary to repeat the measurements. Indicated below are the most common preferences.

Function	(Refer to Setup mode, Function)
R/K:	Refraction and Keratometer mode.
REF:	Refraction mode only.
KRT:	Keratometer mode only.
PK:	Peripheral Keratometer mode.
PHOTO:	Photo mode to enable taking a picture of the cornea. • When aligned, press the button on top of the joystick and then the “Camera to PC” button. • When the “Camera to PC” button is pressed a *.bmp is sent out the serial port.
REF	(Refer to Setup mode, REF)
STEP:	Set the refraction step to 0.25 or 0.12 diopters.
VD:	Set the vertex distance to 0, 10, 12, **13.5**, or 15 mm.
CYL:	Cylinder mode of “-”, “+”, or “+/-”.
KRT	(Refer to Setup mode, KRT)
UNIT:	Set the keratometer units to either mm or diopters.
R/L AUTO:	Automatically moves to the other eye after all measurements of the one eye are acquired. Either ON or OFF.
OUTPUT	(Refer to Setup mode, OUTPUT)
PRINT:	Sets the printer to print ALL, ECO, or OFF.
OPTION	(Refer to Setup mode, OPTION)
REST:	Displays Residual Astigmatism on the printer paper when selected. Either ON or OFF.

Measurement

The following information describes the correct method for acquiring refractor and keratometer measurements using the RK700.

1. Ask the patient to place their chin on the Chin Rest and move their head forward until their forehead is placed against the Headrest.
2. Have the patient look straight ahead and focus on the green target.

Note: If the patient cannot see the green target, adjust the alignment of the patient using the Chinrest Switch. Move the chinrest up or down to center the apex of the patient’s eye with the canthus marks.

Note: The patient should be seated comfortably on the patient side of the instrument.

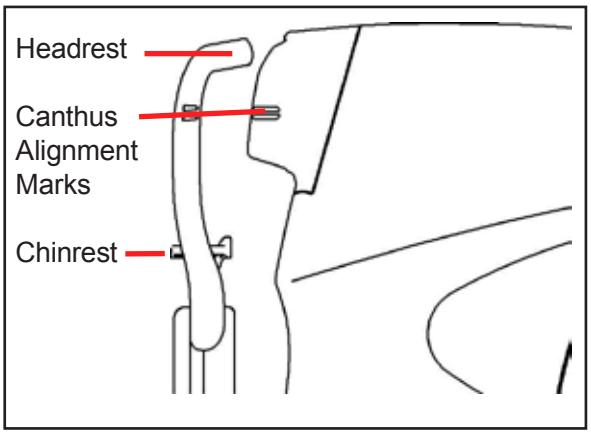

Figure 2-3, RK700 Chinrest

Note: The patient should be positioned in a way that encourages them to lean forward with their chin as close to the instrument as possible. This will reduce the
difficulties associated with misalignment and low confidence readings.

- Continued on the next page -

Instructions For Use (Continued)

Measurement (continued)

3. Move the Joystick as necessary until the patient's pupil is centered over the Alignment Mark (+) and the circle is in focus on the Operator Display. (Refer to *Joystick Settings* for operation of the Joystick)

Note: The Joystick can be configured for two different methods in the UP and DOWN, and BACK and FORTH directions. (Refer to *Joystick Settings* for operation of the Joystick)

Note: If the Auto Switch is set to auto-align (2nd from the left icon), when the pupil is near the alignment mark the auto alignment system will automatically align to the apex of the eye.

4. Press the Measurement Start Switch on the top of the Joystick to acquire readings on the eye that is aligned.

Note: If the instrument is set to the Auto-Quick mode (START option) and the Measurement Start Switch on the top of the Joystick is pressed, the instrument will automatically initiate one keratometry measurement and three refractive measurements.

Note: If the instrument is set for the Auto mode (START option) and the Measurement Start Switch on the top of the Joystick is pressed, the instrument will automatically initiate three keratometry measurements and three refractive measurements.

5. Repeat the above steps for the other eye.

Note: If the R/L Auto option is set to ON, then when the first eye data is completed, the alignment system will automatically move to the other eye.

6. Press the PRINT button if a print-out of the measurements is desired. A description of the screen data is shown below.

Note: If the Auto Print option is set to ON, then when both the left and the right eye data is completed, then the unit will automatically print out the data.

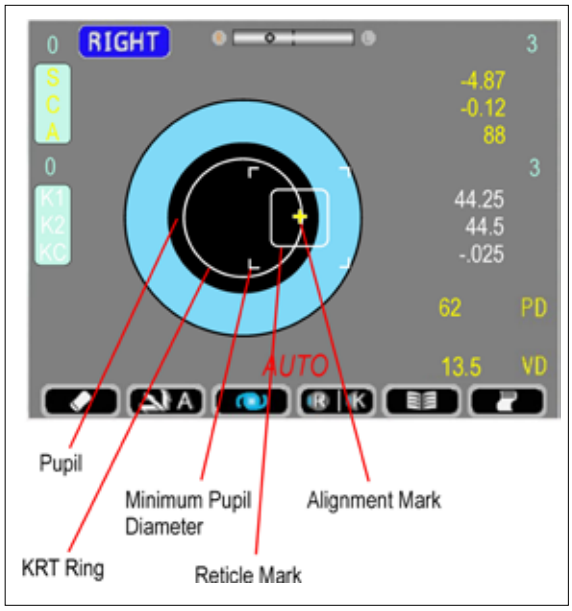

Figure 2-4, Right Eye Not Aligned



Figure 2-5, Right Eye Aligned

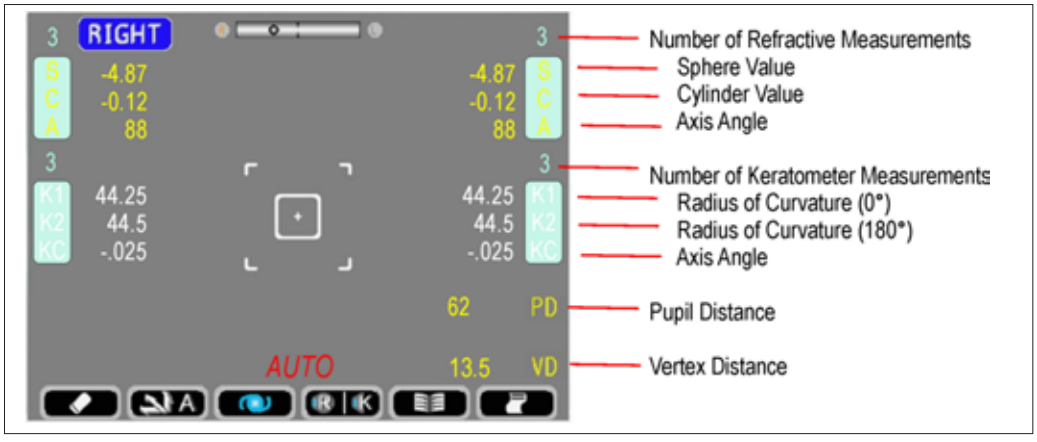

Figure 2-6, Measure Screen Data

Instructions For Use (Continued)

Printing Measurement Data

The RK700 has an integral thermal printer that will provide a paper copy of the measurements if one is requested.

The printer will print the measurement data when either condition is satisfied:
- The print button is activated after measurement(s).
- After all measurements (selected options) are acquired and the AUTO PRINT function is set to “ON.”

A sample output from the printer is shown below.

- When the RK700 is programmed so that the default Output setup mode is set to print ALL, a sample of the measured details are shown on the left side of the figure below.
- When the RK700 is programmed so that the default Output setup mode is set to print ECO, a sample of the measured details are shown on the right side of the figure below.
- If the RK700 is programmed so that the default Output setup mode is set to print OFF, the printer will not print.

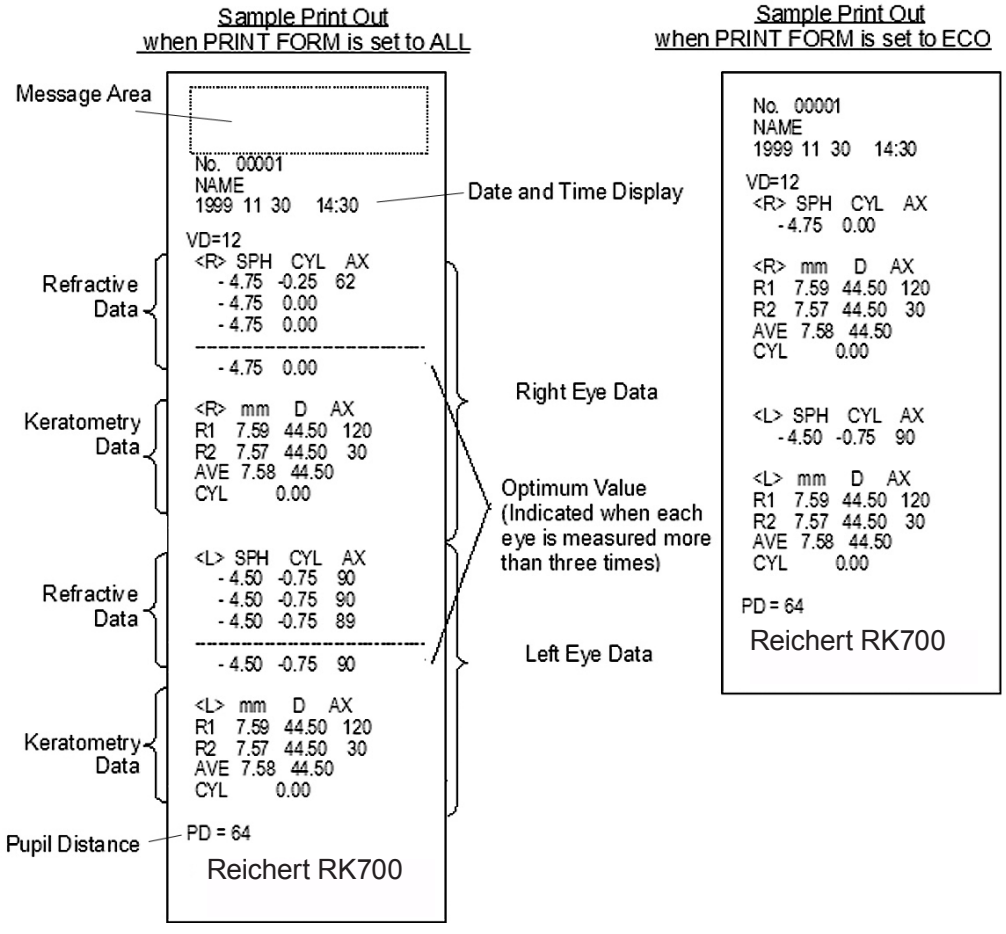

Figure 2-7, RK700 Sample Printer

Instructions For Use (Continued)

Contact Lens - Base Curve Measurement

This instrument can measure the base curve of a hard contact lens. To do so, attach a contact lens onto the contact lens holder of the model eye.
(Refer to Figure 2-8)

1. Put a small amount of water on the concave side of the contact lens holder.

2. Place the contact lens so that its convex side faces the holder.

3. Confirm the contact lens is firmly adhered to the holder with water and does not slip down. Slide the model eye under the chinrest liner pins on the chinrest and then measure the contact lens.

Note: The vertex distance must be set to zero or incorrect data will be displayed.

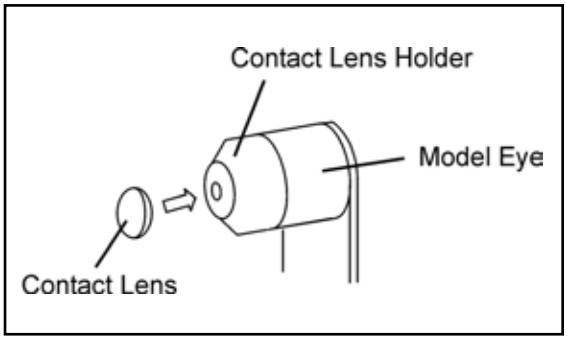

Figure 2-8, Contact Lens Holder

Maintenance

Perform the following procedures as needed to keep this instrument operating correctly.

CAUTION: DO NOT USE ALCOHOL, SOLVENTS OR STRONG CLEANING SOLUTIONS ON THE ALIGNMENT WINDOWS OR DAMAGE TO THE WINDOWS WILL OCCUR.

External Cleaning

Remove power from the unit and clean the external surfaces of this instrument at least 3 times per year using a clean, soft cloth lightly moistened with a mild detergent solution (1 cc of liquid dish soap to one liter of clean, filtered water (filtered below 5 microns)). Do not allow the mild detergent solution to drip inside the instrument or damage to the unit may occur.

LCD Cleaning

Remove power from the unit and clean the external surfaces of the LCD using a clean, soft cloth lightly moistened with a mild detergent solution (1 cc of liquid dish soap to one liter of clean, filtered water (filtered below 5 microns)). Do not allow the mild detergent solution to drip inside the instrument or damage to the unit may occur.

Patient Window Cleaning

Clean the external surfaces of the Patient Window using a lens cleaning cloth that is lightly moistened with a lens cleaner that is safe for plastic lenses. Do not allow the lens cleaning solution to drip inside the instrument or damage to the unit may occur.

Printer Paper Replacement

To change the printer paper, perform the following:

1. Push on the printer door button to open the printer paper door.
2. Remove the empty roll and place a new roll of Reichert thermal paper in the printer compartment as shown below.
3. Align the paper over the center of the rubber roller and close the printer door.
4. Press and hold the paper feed button below the LCD screen (right button) until a small amount of paper is ejected.
5. The printer is now ready to use. To order replacement thermal paper, call your local dealer and ask for Reichert thermal paper (P/N 12441).

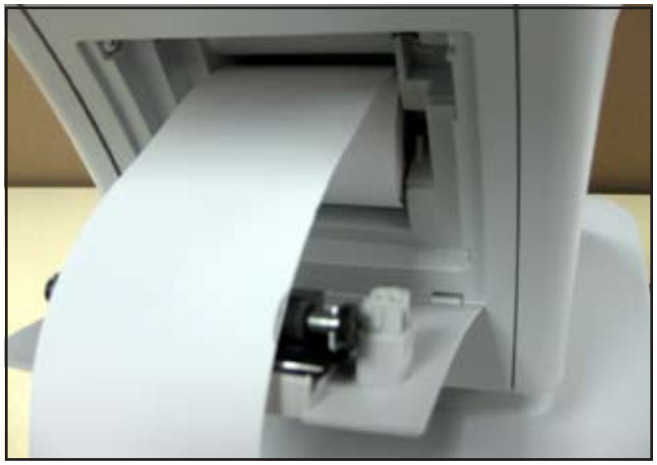

Figure 2-9, Printer Paper Replacement

- Continued on next page -

Maintenance (Continued)

Fuse Replacement

To change the fuses, perform the following:

1. Unplug the power cord from the unit before removing the fuse holder.
2. Remove the Fuse Holder from the instrument by turning it approximately 1/4 turn counter-clockwise.
3. Replace the fuse in the Fuse Holder with a new one that has the same specifications.
4. Install the Fuse Holder by pushing it into its mating receptacle on the unit and turn the Fuse Holder approximately 1/4 turn clockwise.

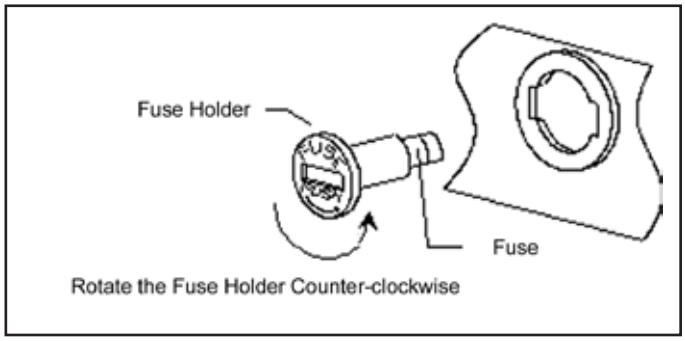

Figure 2-10, Fuse Replacement

Troubleshooting

The following chart provides details of common complaints and solutions for the RK700.

WARNING: DO NOT REMOVE THE OUTSIDE COVERS OF THE UNIT OR ATTEMPT TO REPAIR ANY INTERNAL PARTS. REPAIR AND SERVICE OF THIS UNIT MUST BE PERFORMED BY EXPERIENCED REICHERT PERSONNEL OR AUTHORIZED DISTRIBUTORS WHO ARE TRAINED BY REICHERT.

Details	Probable Cause	Solution
Screen blank.	• Unit in Sleep Mode. • ON/OFF Switch set to OFF. • Contrast is set too low. • Fuse(s) Blown.	• Press any button. • Press the ON/OFF button to OFF, wait 2 minutes then push it to ON. • Adjust contrast in Setup menu. • Replace blown fuse(s) (Refer to *Maintenance section*).
Instrument not responding to buttons.	• Instrument is “locked up.”	• Remove power from the instrument and then apply power to reset the unit.
Joystick is not moving appropriately.	• Damaged or dirty Joystick.	• Do not move the part forcibly. Contact your local Reichert Authorized Dealer for service.
Chinrest is not moving up or down.	• Damaged or dirty chinrest motor.	• Do not move the part forcibly. Contact your local Reichert Authorized Dealer for service.
Finds one eye not the other. Infrared interference.	• Light interference on measuring side.	• Remove interference (e.g., infrared light source).
Will not take a reading.	• Patient not holding still. • Patient is not against the forehead rest. • Patient not focusing on target (eye moving around). • Dirty Patient Window.	• Encourage patient to remain still. • Have patient move toward nosepiece. • Have patient look only at target. • Clean the Patient Windows (Refer to *Maintenance section*).
Only taking R or K readings.	• Unit is set for only taking R or K readings. • SETUP mode has one of the modes set to OFF.	• Press the Measure Mode button so that the correct mode is selected (Refer to *Instrument Setup*). • Change the Function settings to select the desired function (Refer to *Instrument Setup*).
Printer not printing.	• Printer out of paper. • Printer paper in backwards. • Not using Reichert thermal paper.	• Replace paper (Reichert P/N 12241) (Refer to *Maintenance section*). • Reverse the printer paper. • Replace paper (Reichert P/N 12241) (Refer to *Maintenance section*).
Printer indicates “Cover of printer is open.”	• Printer Door is open.	• Close Printer Door.
Printer indicates “Paper empty.”	• Printer is out of paper. • The printer paper is not installed properly.	• Replace paper (Reichert P/N 12241) (Refer to *Maintenance section*). • Replace paper (Reichert P/N 12241) (Refer to *Maintenance section*).
The date setting becomes inaccurate.”	• The internal battery for the memory has discharged.	• Leave power applied to the unit for 12 or more hours so that the internal battery can fully recharge, then set the date and time.

Classification

The RK700 has the following equipment and classifications and standards:

Technical Standards	**93/42/EEC** **IEC 60601**
Equipment Classification per EN 60601-1	Class I. Refer to Note 1.
Degree of Protection against Electrical Shock per EN60601-1-1	Type B Equipment. Refer to Note 2.
IPX Classification	IPX0 Equipment Refer to Note 3.
Continuous Operation Equipment	Yes
ISO 9001, ISO 13485 Certified	Yes

Note 1: Class 1 Equipment is equipment in which protection against electric shock does not rely on basic insulation only, but which includes an additional safety precaution in that means are provided for the connection of the equipment to a protective earth conductor in the fixed wiring of the installation in such a way which accessible metal parts cannot become live in the event of a failure of the basic insulation.

Note 2: Type B Equipment provides an adequate degree of protection against electrical shock, particularly regarding allowable leakage currents and reliability of the protective earth connection.

Note 3: IPX0 Equipment is ordinary equipment enclosed without protection against ingress of water.

Guidance Tables

Table 201 – Guidance and Manufacturer's Declaration

Emissions

All Equipment and Systems

Guidance and Manufacturer's Declaration – Emissions

The RK700 is intended for use in the electromagnetic environment specified below. The customer or user of the RK700 should ensure that it is used in such an environment.

Emissions Test	Compliance	Electromagnetic Environment - Guidance -
RF Emissions CISPR 11	Group 1	The RK700 uses RF energy only for its internal function. Therefore, its RF emissions are very low and are not likely to cause any interference in nearby electronic equipment.
RF Emissions CISPR 11	Class A	The RK700 is suitable for use in all establishments, other than domestic, and those directly connected to the public low-voltage power supply network that supplies buildings used for domestic purposes.
Harmonics IEC 61000-3-2	Class A	
Flicker IEC 61000-3-3	Complies	

Guidance Tables (Continued)

Table 201 – Guidance and Manufacturer's Declaration

Immunity

All Equipment and Systems

Guidance and Manufacturer's Declaration – Emissions

The RK700 is suitable for use in all establishments, other than domestic, and those directly connected to the public low-voltage power supply network that supplies buildings used for domestic purposes. is intended for use in the electromagnetic environment specified below. The customer or user of the RK700 should ensure that it is used in such an environment.

Immunity Test	IEC 60601 Test Level	Compliance Level	Electromagnetic Environment - Guidance
ESD IEC 61000-4-2	±6kV Contact ±8kV Air	±6kV Contact ±8kV Air	Floors should be wood, concrete or ceramic tile. If floors are synthetic, the r/h should be at least 30%.
EFT IEC 61000-4-4	±2kV Mains ±1kV I/Os	±2kV Mains ±1kV I/Os	Mains power quality should be that of a typical commercial or hospital environment.
Surge IEC 61000-4-5	±1kV Differential ±2kV Common	±1kV Differential ±2kV Common	Mains power quality should be that of a typical commercial or hospital environment.
Voltage Dips/Dropout IEC 61000-4-11	>95% Dip for 0.5 Cycle 60% Dip for 5 Cycles 30% Dip for 25 Cycles >95% Dip for 5 Seconds	>95% Dip for 0.5 Cycle 60% Dip for 5 Cycles 30% Dip for 25 Cycles >95% Dip for 5 Seconds	Mains power quality should be that of a typical commercial or hospital environment. If the user of the RK700 requires continued operation during power mains interruptions, it is recommended that the RK700 be powered from an uninterruptible power supply or battery.
Power Frequency 50/60Hz Magnetic Field IEC 61000-4-8	3A/m	3A/m	Power frequency magnetic fields should be that of a typical commercial or hospital environment.

Guidance Tables (Continued)

Table 204 – Guidance and Manufacturer's Declaration

Emissions

Equipment and Systems that are NOT Life-supporting

Guidance and Manufacturer's Declaration – Emissions

The RK700 is intended for use in the electromagnetic environment specified below. The customer or user of the RK700 should ensure that it is used in such an environment.

Immunity Test	IEC 60601 Test Level	Compliance Level	Electromagnetic Environment - Guidance
Conducted RF IEC 61000-4-6 Radiated RF IEC 61000-4-3	3 Vrms 150 kHz to 80 MHz 3 V/m 80 MHz to 2.5 GHz	(V1)=3Vrms (E1)=3V/m	Portable and mobile communications equipment should be separated from the RK700 by no less than the distances calculated/listed below: D=(3.5/V1)(Sqrt P) D=(3.5/E1)(Sqrt P) 80 to 800 MHz D=(7/E1)(Sqrt P) 800 MHz to 2.5 GHz Where P is the max power in watts and D is the recommended separation distance in meters. Field strengths from fixed transmitters, as determined by an electromagnetic site survey, should be less than the compliance levels (V1 and E1). Interference may occur in the vicinity of equipment containing a transmitter.

Guidance Tables (Continued)

Table 206 – Recommended Separation Distances between portable and mobile RF

Communications equipment and the RK700

Equipment and Systems that are NOT Life-supporting

Recommended Separation Distances for the RK700

The RK700 is intended for use in the electromagnetic environment in which radiated disturbances are controlled. The customer or user of the RK700 can help prevent electromagnetic interference by maintaining a minimum distance between portable and mobile RF Communications Equipment and the RK700 as recommended below, according to the maximum output power of the communications equipment.

Max Output Power (Watts)	Separation (m) 150kHz to 80 MHz D=1.1667(Sqrt P)	Separation (m) 80 to 800 MHz D=1.1667(Sqrt P)	Separation (m) 800MHz to 2.5GHz D=2.3333(Sqrt P)
0.01	0.1166	0.1166	0.2333
0.1	0.3689	0.3689	0.7378
1	1.1666	1.1666	2.3333
10	3.6893	3.6893	7.3786
100	11.6666	11.6666	23.3333

Appendix A - RS232C / USB Interface

Connections from the RK700 to a computer are possible using either of the following two methods.

RS232C:

- Baud Rate: (bps) 115200, 38400, or 9600
- Parity None
- Data Bits 8
- Stop Bits 1

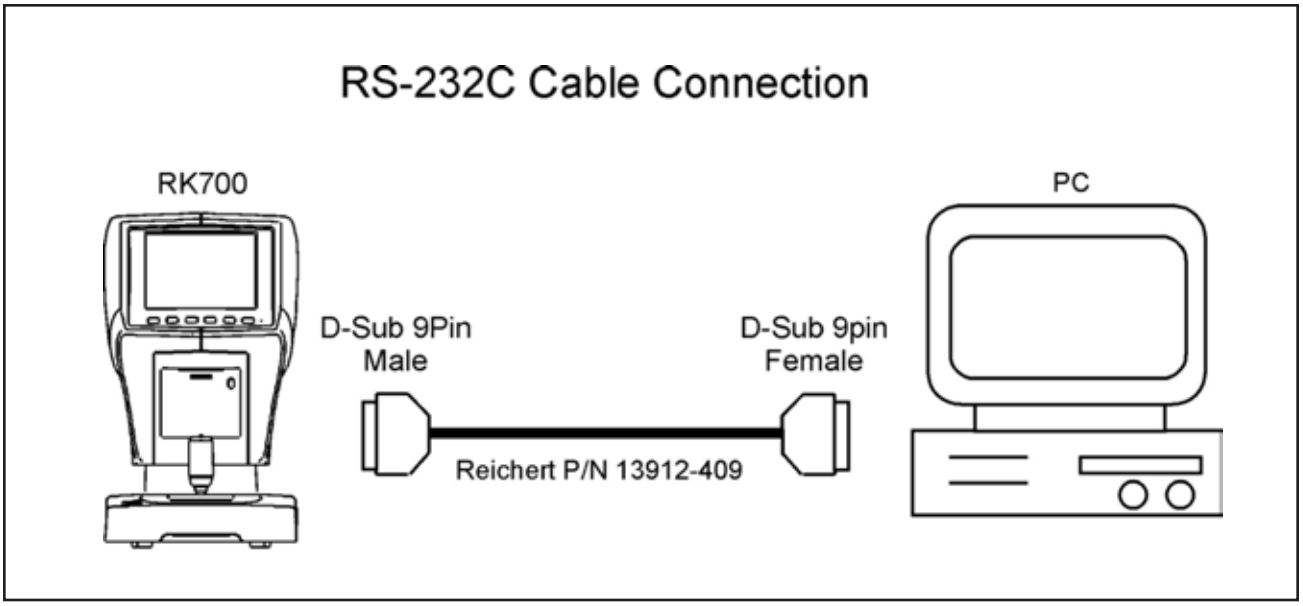

- OR -

USB:

- Baud Rate: (bps) 921600
  Note: The USB drivers are available on the associated product page at reichert.com.

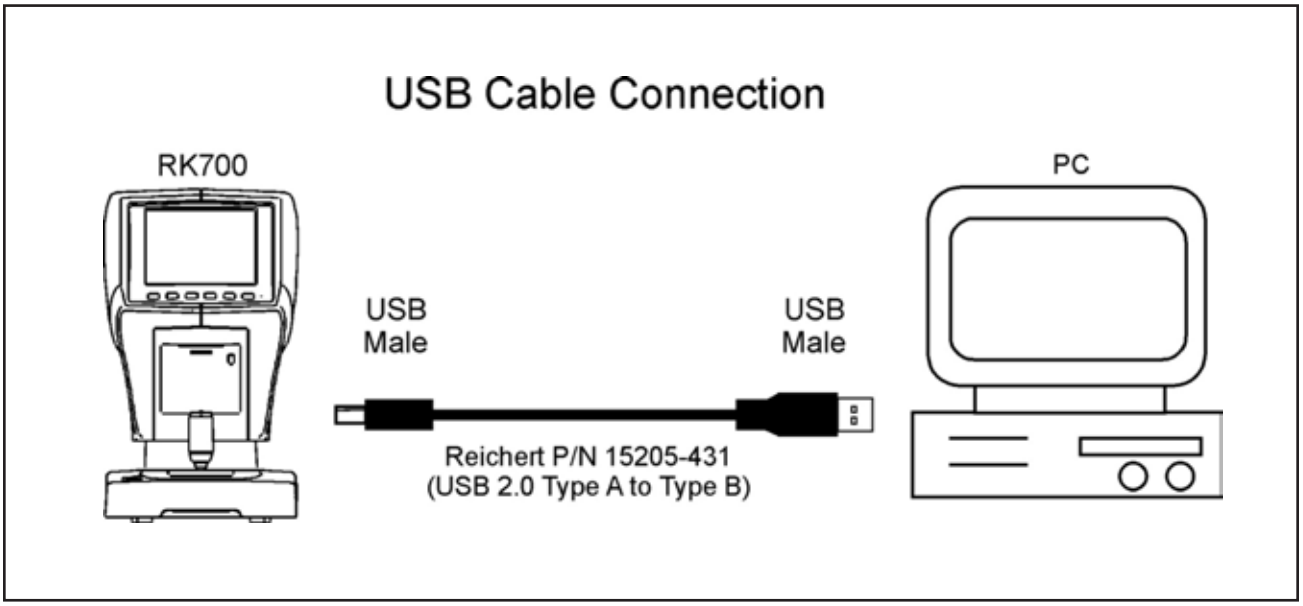

Appendix B - Installation of PictureReceiver

The RK700 offers a photo option among the measurement functions that allows you to take an anterior photo of the eye and store it in a PC.

A CD containing the software and USB driver to receive and store images is provided with the instrument. A USB2.0 cable (not provided) is required to connect the instrument from the USB port on the side of the device to a PC.

Software Installation

1. Connect the USB2.0 cable from the instrument to the PC.
2. Apply input power to the instrument and ensure that the PC initializes correctly.
3. The screen below will appear automatically. Insert the Picture Receiver CD into the disc drive of the PC and click “Next.” Refer to Figure B-1.

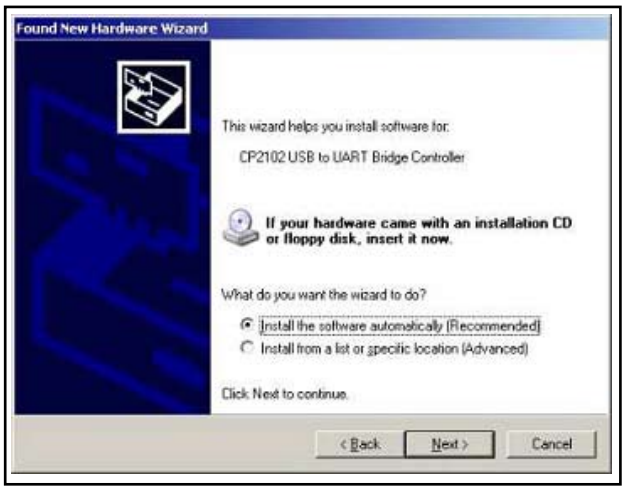

Figure B-1, Request for Installation CD

4. When the installation is complete click “Finish.” Refer to Figure B-2.



Figure B-2, Request for Finish

Appendix B - Installation of PictureReceiver (Continued)

Using PictureReceiver

1. Go to “My Computer” and copy the PictureReceiver.exe from the CD onto the hard drive of the PC in a location that is easily accessible to everone.

   Note: PictureReceiver will not operate correctly if you do not copy the file to the PC.

2. Go to the location on the hard drive of the PC where the PictureReceiver.exe was saved and double-click on it so that the file begins setup. Refer to Figure B-3.
   The following screen will appear:

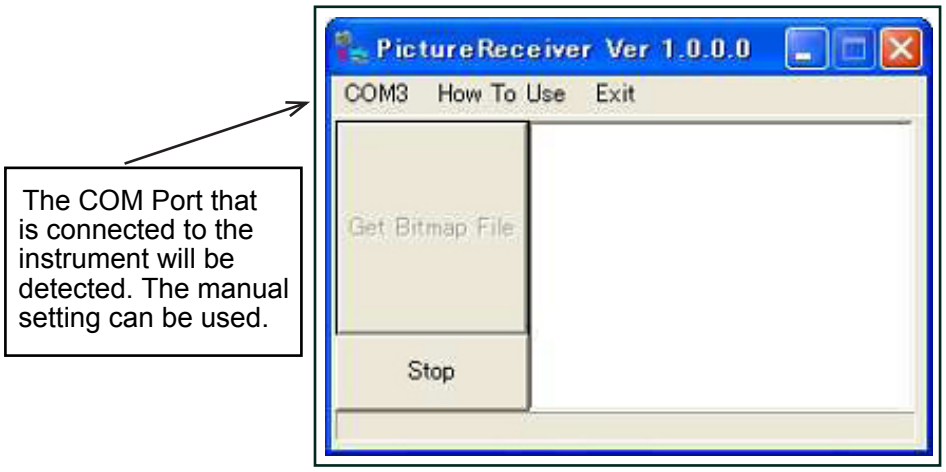

Figure B-3, Picture Receiver

3. During the installation procedure the COM port that is connected to the instrument should be detected. If another COM port is desired, the setting may be changed manually. Refer to Fig. B-3.
4. Click on “Get Bitmap File”. The dialog box shown below will appear. Specify the location where you would like to save image data. Refer to Figure B-4.



Figure B-4, My Computer

Appendix B - Installation of PictureReceiver (Continued)

Using PictureReceiver (Continued)

5. The screen will return to the following dialog box and the “Get Bitmap File” field will be grayed out.

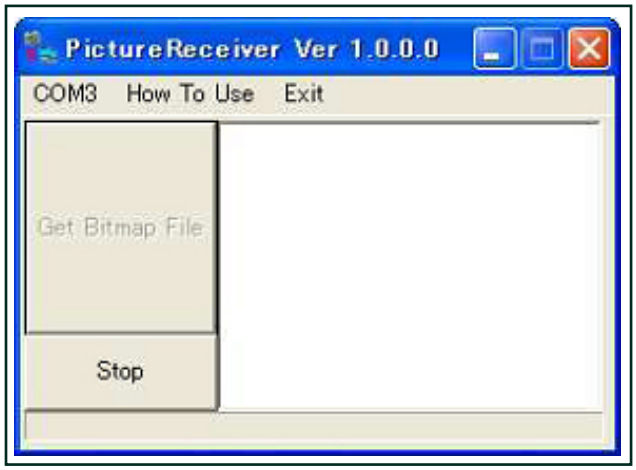

Figure B-5, Picture Receiving

6. To receive images, operate the photo function of the instrument by setting the measurement button below the screen to photo and pressing the button on top of the joystick. Receipt of the image will be initiated and will take about 10 seconds to be completed. Press the Measurement Start Switch on top of the Joystick for each additional image you would like to receive. Images are stored as Bitmap files in the following format (example shown):

10 04 21_012.bmp

Y M D Serial No.

7. When finished taking images, click the “Stop” button in the dialog box. To close PictureReceiver, click on “Exit” and then “ExitProgram.” Refer to Figure B-5.

Appendix C - General Specifications

Specifications

Physical Data

Height:	17.5 inches (44.5 centimeters)
Width:	10.5 inches (26.6 centimeters)
Depth:	18.3 inches (46.5 centimeters)
Weight, unpacked:	35.3 pounds (16.0 kilograms)

Keratometer

Radius of Curvature:	5.00 mm thru 10.00 mm (0.01 mm steps)
Corneal Power:	33.75D thru 67.50D (0.12D, 0.25D steps)
Cylinder:	0 thru +10 D (0.12D, 0.25D steps)
Axis:	0^0 thru 180^0 (1^0 steps)
Peripheral Meas.	Φ 7.0mm

Refractor

Sphere	-30.00D thru +22.00D (0.12D, 0.25D steps)
Cylinder	0 thru +10.00D
Axis	0^0 thru 180^0 (1^0 steps)

Measurement Accuracy

Sphere	-10.00D thru +10.00D = ±0.25D, else 0.50D
Cylinder	±0.25D

Note: To verify the unit is making accurate measurements, take a measurement using the model eye that is sent with the unit.

Other

PD Range 85mm, 1mm steps

Vertex Distance	0, 10, 12, 13.5, 15 mm
Pupil Diameter Min.	2.2mm (> 2.2mm increases standard measurement error)

Electrical Data

Voltage (nominal)	100 ~ 240 VAC
Frequency	50/60 Hz
Power	90 VA
Fuses	250 VAC, 2 Amps

Operating Environment

Temperature	50°F to 104°F (10°C to 40°C)

Transportation & Storage

Temperature	14°F to 131°F (-10°C to +55°C)
Relative Humidity	10% to 95% (non-condensing)
Atmospheric Press.	70 to 106 kilopascals

Disposal

This product does not generate any environmentally hazardous residues. At the end of its product life, follow your local laws and ordinances regarding the proper disposal of this equipment.

Warranty

This product is warranted by Reichert Technologies (“Reichert”) against defective material and workmanship under normal use for a period of one year from the date of invoice to the original purchaser. (An authorized dealer shall not be considered an original purchaser.) Under this warranty, Reichert’s sole obligation is to repair or replace the defective part or product at Reichert’s discretion.

This warranty applies to new products and does not apply to a product that has been tampered with, altered in any way, misused, damaged by accident or negligence, or that has the serial number removed, altered or effaced. Nor shall this warranty be extended to a product installed or operated in a manner not in accordance with the applicable Reichert instruction manual, nor to a product that has been sold, serviced, installed or repaired other than by a Reichert factory, Technical Service Center, or authorized Reichert dealer.

Lamps, bulbs, charts, cards and other expendable items are not covered by this warranty.

All claims under this warranty must be in writing directed to the Reichert factory, Technical Service Center, or authorized instrument dealer making the original sale and must be accompanied by a copy of the purchaser’s invoice.

This warranty is in lieu of all other warranties implied or expressed. All implied warranties of merchantability or fitness for a particular use are hereby disclaimed. No representative or other person is authorized to make any other obligations for Reichert. Reichert shall not be liable for any special, incidental, or consequent damages for any negligence, breach of warranty, strict liability or any other damages resulting from or relating to design, manufacture, sale, use or handling of the product.

PATENT WARRANTY

If notified promptly in writing of any action brought against the purchaser based on a claim that the instrument infringes a U.S. Patent, Reichert will defend such action at its expense and will pay costs and damages awarded in any such action, provided that Reichert shall have sole control of the defense of any such action with information and assistance (at Reichert’s expense) for such defense, and of all negotiation for the settlement and compromise thereof.

PRODUCT CHANGES

Reichert reserves the right to make changes in design or to make additions to or improvements in its products without obligation to add such to products previously manufactured.

CLAIMS FOR SHORTAGES

We use extreme care in selection, checking, rechecking and packing to eliminate the possibility of error. If any shipping errors are discovered:

1. Carefully go through the packing materials to be sure nothing was inadvertently overlooked when the unit was unpacked.
2. Call the dealer you purchased the product from and report the shortage. The materials are packed at the factory and none should be missing if the box has never been opened.
3. Claims should be filed within 30 days.

CLAIMS FOR DAMAGES IN TRANSIT

Our shipping responsibility ceases with the safe delivery in good condition to the transportation company. Claims for loss or damage in transit should be made promptly and directly to the transportation company.
If, upon delivery, the outside of the packing case shows evidence of rough handling or damage, the transportation company’s agent should be requested to make a “Received in Bad Order” notation on the delivery receipt. If within 48 hours of delivery, concealed damage is noted upon unpacking the shipment and no exterior evidence of rough handling is apparent, the transportation company should be requested to make out a “Bad Order” report. This procedure is necessary in order for the dealer to maintain the right of recovery from the carrier.

Notes:

Notes:

Notes:



Reichert Technologies.
3362 Walden Ave
Depew, NY 14043
USA

Toll Free: 888-849-8955
Phone: 716-686-4500
Email: info@reichert.com
www.reichert.com

Reichert GmbH
Hubertstrasse 2
D-82229 Seefeld
Germany

Tel: +49 8152 993530
Fax: +49 8152 993535

ISO-9001/13485 Registered

CE
0120

15160-101 Rev B

May 2010