OptoChek® Plus

Auto Refractor / Keratometer

Instructions for Use



Reichert
AMETEK

Scan for additional information and languages:

©2023 AMETEK, Inc.

Reichert, Reichert Technologies, and OptoChek are registered trademarks of Reichert, Inc.

AMETEK is a registered trademark of AMETEK, Inc.

All other trademarks are property of their respective owners.

The information contained in this document was accurate at time of publication. Specifications subject to change without notice. Reichert, Inc. reserves the right to make changes in the product described in this manual without notice and without incorporating those changes in any products already sold.

ISO 13485 Certified – Reichert products are designed and manufactured under quality processes meeting ISO 13485 requirements.

No part of this publication may be reproduced, stored in a retrieval system, or transmitted in any form or by any means, electronic, mechanical, recording, or otherwise, without the prior written permission of Reichert, Inc.

Caution: Federal law restricts this device to sale by or on the order of a licensed physician. Rx only.

Contents

Warnings and Cautions 4
Symbol Information 6
Introduction 7
- Indications for Use 7
- Contraindications 7

Instrument Setup 8
- Unpacking and Contents 8
- Parts Identification 10
- Icon Definition 11
- RS232C Output 12
- Precautions Regarding the IT Network 13
- Transportation of the OptoChek 13
- Instrument Settings 14

Operation 18
- Printer Paper Installation 18
- Measurement Modes 19
- Screen Modes 20
- Data Screen Functions 21
- Sample Printout 22
- Measuring Contact Lenses 23
- Tips for Effective Measurements 24

Maintenance & Cleaning 25
- Printer Paper Replacement 25
- Fuse Replacement 25
- Chinrest Paper Replacement 25
- Confirmation of Measurement Accuracy 26
- Model Eye Measurement 26
- Measuring Window Filter Cleaning 26
- Eye Lens Cleaning 26
- Model Eye Cleaning 26
- Cleaning 27
- External Cleaning 27
- Operator Display Cleaning 27

Troubleshooting 28
Specifications 30
- Disposal 31
- Software Revision 31
- Classifications 32

Guidance and Manufacturer’s Declarations 33
Warranty 37
Notes 38

Warnings & Cautions

Reichert, Inc. (Reichert) is not responsible for the safety and reliability of this instrument when:

- Assembly, disassembly, repair, or modification is made by unauthorized dealers or persons.
- Instrument is not used in accordance with this manual.

WARNING: AN INSTRUCTION THAT DRAWS ATTENTION TO RISK OF INJURY OR DEATH.



WARNING: UNITED STATES FEDERAL LAW AND EUROPEAN REGULATIONS REQUIRE THAT THIS DEVICE BE PURCHASED ONLY BY A PHYSICIAN OR A PERSON ACTING ON BEHALF OF A PHYSICIAN.

WARNING: THIS INSTRUMENT SHOULD BE USED IN STRICT ACCORDANCE WITH THE INSTRUCTIONS OUTLINED IN THIS MANUAL. THE SAFETY OF THE OPERATOR AND THE PERFORMANCE OF THE INSTRUMENT CANNOT BE GUARANTEED IF USED IN A MANNER NOT SPECIFIED BY REICHERT TECHNOLOGIES.

WARNING: DO NOT REPAIR OR SERVICE THIS INSTRUMENT WITHOUT AUTHORIZATION FROM THE MANUFACTURER. ANY REPAIR OR SERVICE TO THIS INSTRUMENT MUST BE PERFORMED BY EXPERIENCED PERSONNEL OR DEALERS WHO ARE TRAINED BY REICHERT OR SERIOUS INJURY TO THE OPERATOR OR PATIENT MAY OCCUR.

WARNING: MODIFICATIONS TO THIS INSTRUMENT ARE NOT ALLOWED ANY MODIFICATION TO THIS UNIT MUST BE AUTHORIZED BY REICHERT OR SERIOUS INJURY TO THE OPERATOR OR PATIENT MAY OCCUR.

WARNING: IF THIS INSTRUMENT IS MODIFIED, APPROPRIATE INSPECTION AND TESTING MUST BE CONDUCTED TO ENSURE CONTINUED SAFE USE OF THIS INSTRUMENT.

WARNING: TO AVOID RISK OF ELECTRIC SHOCK, THIS EQUIPMENT MUST ONLY BE CONNECTED TO A SUPPLY MAINS WITH PROTECTIVE EARTH OR DAMAGE TO THIS INSTRUMENT AND/OR INJURY TO THE OPERATOR OR PATIENT MAY OCCUR.

WARNING: ENSURE THAT THE VOLTAGE APPLIED TO THE UNIT IS THE SAME AS THE VOLTAGE THAT IS INDICATED ON THE DATA PLATE OR DAMAGE TO THE UNIT MAY OCCUR.

WARNING: THIS INSTRUMENT MUST BE PLUGGED INTO AN OUTLET WITH AN EARTH GROUND. DO NOT REMOVE OR DEFEAT THE EARTH GROUND CONNECTION ON POWER INPUT CONNECTOR OR THE UNIT'S POWER CORD OF THIS INSTRUMENT OR DAMAGE TO IT AND/OR INJURY TO THE OPERATOR OR PATIENT MAY OCCUR.

WARNING: THIS INSTRUMENT IS NOT SUITABLE FOR USE IN THE PRESENCE OF FLAMMABLE ANESTHETIC MIXTURES, SUCH AS OXYGEN OR NITROUS OXIDE.

WARNING: THE EQUIPMENT OR SYSTEM SHOULD NOT BE USED ADJACENT TO OR STACKED WITH OTHER EQUIPMENT AND THAT IF ADJACENT OR STACKED USE IS NECESSARY, THE EQUIPMENT OR SYSTEM SHOULD BE OBSERVED TO VERIFY NORMAL OPERATION IN THE CONFIGURATION IN WHICH IT WILL BE USED.

WARNING: THE USE OF ACCESSORIES OR CABLES OTHER THAN THOSE SPECIFIED, WITH THE EXCEPTION OF THOSE SOLD BY THE MANUFACTURER AS REPLACEMENT PARTS FOR THE INTERNAL COMPONENTS, MAY RESULT IN INCREASED EMISSIONS OR DECREASED IMMUNITY OF THE EQUIPMENT OR SYSTEM.

WARNING: DO NOT TOUCH THE EXTERNAL CONNECTION TERMINAL AND PATIENT AT THE SAME TIME. IT MAY CAUSE ELECTRIC SHOCK.

Warnings & Cautions (continued)

CAUTION: AN INSTRUCTION THAT DRAWS ATTENTION TO THE RISK OF DAMAGE TO THE PRODUCT.



CAUTION: DO NOT USE SOLVENTS OR STRONG CLEANING SOLUTIONS ON ANY PART OF THIS INSTRUMENT AS DAMAGE TO THE UNIT MAY OCCUR. SEE MAINTENANCE SECTION FOR DETAILED CLEANING INSTRUCTION.

CAUTION: USE OF AMMONIA BASED CLEANERS ON THE LIQUID CRYSTAL DISPLAY (LCD) MAY CAUSE DAMAGE TO THE DISPLAY. SEE MAINTENANCE SECTION FOR DETAILED CLEANING INSTRUCTION.

CAUTION: PORTABLE AND MOBILE RF COMMUNICATIONS EQUIPMENT CAN EFFECT MEDICAL ELECTRICAL EQUIPMENT.

CAUTION: THE INTERNAL CIRCUITRY OF THE INSTRUMENT CONTAINS ELECTROSTATIC DISCHARGE SENSITIVE DEVICES (ESDS) THAT MAY BE SENSITIVE TO STATIC CHARGES PRODUCED BY THE HUMAN BODY. DO NOT REMOVE THE COVERS WITHOUT TAKING PROPER PRECAUTIONS.

CAUTION: MEDICAL ELECTRONIC EQUIPMENT NEEDS SPECIAL PRECAUTIONS REGARDING ELECTROMAGNETIC COMPATIBILITY AND NEEDS TO BE INSTALLED AND PUT INTO SERVICE ACCORDING TO THE EMC INFORMATION PROVIDED IN THE ACCOMPANYING DOCUMENTS.

CAUTION: THIS INSTRUMENT IS NOT TO BE USED NEAR HIGH-FREQUENCY EMITTING SURGICAL EQUIPMENT.

CAUTION: THIS INSTRUMENT IS NOT INTENDED TO BE CONNECTED TO EQUIPMENT OUTSIDE THE CONTROL OF REICHERT OR MUST BE TESTED TO AN APPLICABLE IEC OR ISO STANDARDS.

CAUTION: DO NOT INSTALL ANY ADDITIONAL SOFTWARE OTHER THAN WHAT WAS SUPPLIED WITH THIS INSTRUMENT. INSTALLATION OF ADDITIONAL SOFTWARE MAY CAUSE UNEXPECTED OPERATION RESULTING IN MALFUNCTION OF THIS INSTRUMENT

Symbol Information

The following symbols appear on the instrument:



Caution



Alternating Current Power



Type B Applied Part



Protective Earth Connection

I O

ON / OFF

REF

Catalog Number

SN

Serial Number



YYYY-MM-DD

Date of Manufacture



Manufacturer



Waste of Electrical and Electronic Equipment

CE
1639

Compliance to Medical Device Directive 93/42/EEC

ETL CLASSIFIED
Intertek
3063253

Authorized to mark given by Intertek ETL Semko for conformance with electrical standards



Fragile Contents in Shipping Container - handle with care



Keep Dry - Package shall be kept away from rain



This Way Up - Indicates correct upright position of package

EC REP

Authorized Representative in European Community

CH REP

Authorized Representative for Switzerland



Consult Instructions for Use

Introduction

Congratulations on your purchase of the Reichert Technologies® (hereafter referred to as Reichert®) OptoChek® Plus.

These Instructions for Use were designed as a training and reference manual for operation, maintenance, and troubleshooting. We recommend that you read it carefully prior to use and follow the instructions in the guide to ensure optimum performance of your new instrument. Properly trained eyecare professionals such as ophthalmologists, optometrists, opticians and eye care technicians should operate this instrument.

Please retain this manual for future reference and to share with other users. For additional copies of this manual or questions related to the OptoChek Plus contact your local authorized Reichert dealer or contact our Customer Service department directly at:

Tel: +1 716-686-4500
Toll Free: 888-849-8955
Fax: +1 716-686-4555
E-mail: reichert.information@ametek.com

Indications for Use

The OptoChek Plus is a medical device used to objectively measure the refractive power of the eye such as sphere, cylinder and axis. The device also measures the corneal radius of curvature of the eye. The measured values are mainly used to aid in the prescription of spectacle lenses or contact lenses.

Contraindications

None.

Instrument Setup

Unpacking and Contents

Great care has been taken to deliver your OptoChek Plus to you. The packaging was specifically designed to safely transport this instrument. Please retain the packaging for future use in case transportation is required. To remove the unit from its packaging:

1. Cut the shipping straps and open the outside box.
2. Remove the inner box from the outside box and cut the shipping straps and open it. Refer to Figure IS-1.
3. Remove the Accessory Box from the side of the inner box. Refer to Figure IS-2 and IS-3.
4. Remove the Power Cords from below the Accessory Box. Refer to Figure AS-2.
5. Remove the packaging from on top of the OptoChek Plus and lift the OptoChek Plus out of the box. Refer to Figure IS-3 and IS-4.
6. Remove the plastic bag from the OptoChek Plus and then remove the cardboard inserts labeled “Remove When Using” from between the moving section and the stationary base and the foam from behind the Joystick. Refer to Figure IS-4A.



Figure IS-1. Open Outside Box

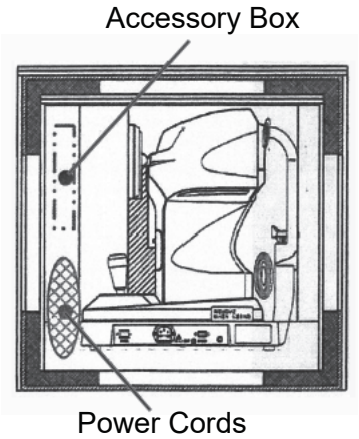

Figure IS-2. Accessories

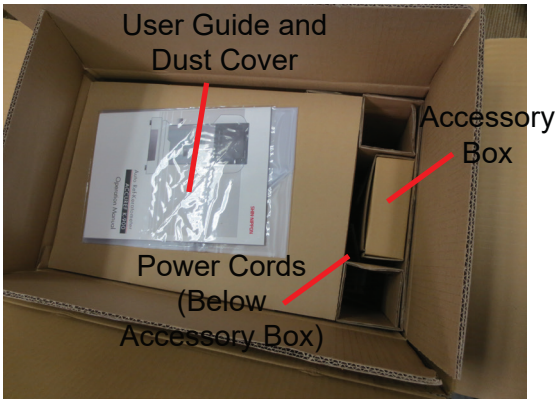

Figure IS-3. Remove Accessories



Figure IS-4. Remove Instrument

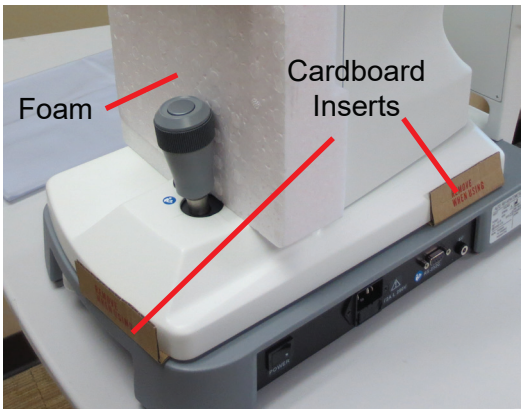

Figure IS-4A. Remove Inserts

Unpacking and Contents (Continued)

The items listed below should be included in the packaging container: (Refer to Figure IS-5.)

- OptoChek Plus (P/N 15170) (Refer to Figure IS-4)
- Instructions for Use (P/N 15170-101) (Refer to Figure IS-3)
- Dust Cover (P/N 15170-002) (Refer to Figure IS-3)
- Accessory Box (Refer to Figure IS-5)
  1. Chinrest Papers (P/N 15170-005)
  2. Chinrest Paper Pins (2) (P/N 15170-004)
  3. Spare Printer Paper (2) (P/N 16290-006)
  4. Spare Fuses (2) (P/N 15170-006)
  5. Verification Model Eye (P/N 15170-003)
- Power Cords : (Refer to Figure IS-5A)
  120V operation (P/N 16290-003) and
  230V operation (P/N 15180-003)

Note: Remove the power cords from the bubble wrap and use the appropriate power cord for your application.

Note: An alternate medical grade power cord for your region may need to be obtained as required by your local laws and ordinances for use with a medical grade device.

If any of the above items are missing, please contact the Reichert Customer Service Department. Contact information can be found in *Introduction* section of this manual.

Optional Accessories:

RS232C Cable (10 ft) (P/N 13912-409)
Wireless Dongle Kit (P/N 15171)

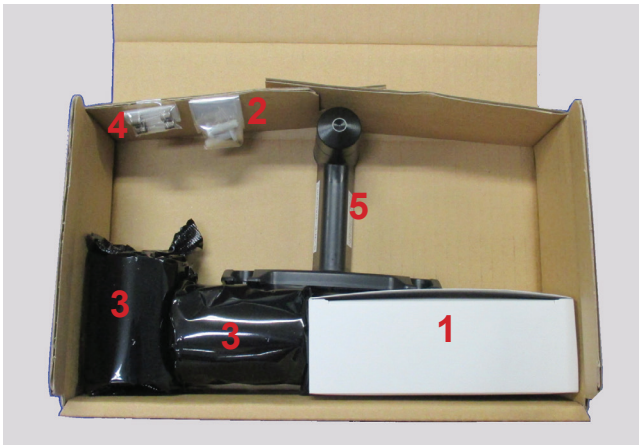

Figure IS-5. Accessories

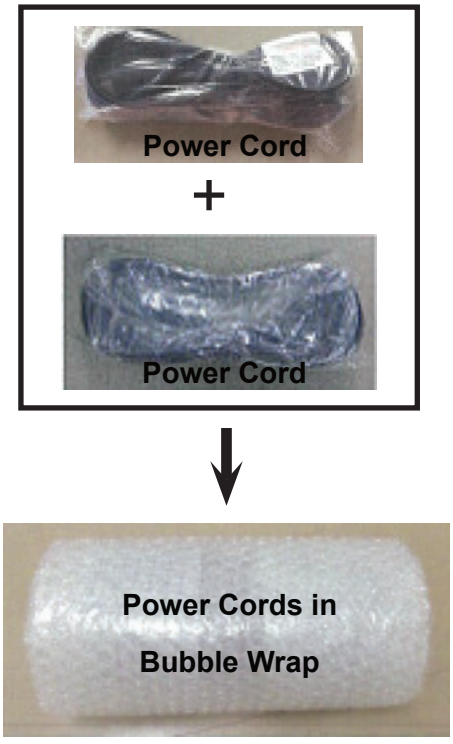

Figure IS-5A. Power Cords

Parts Identification

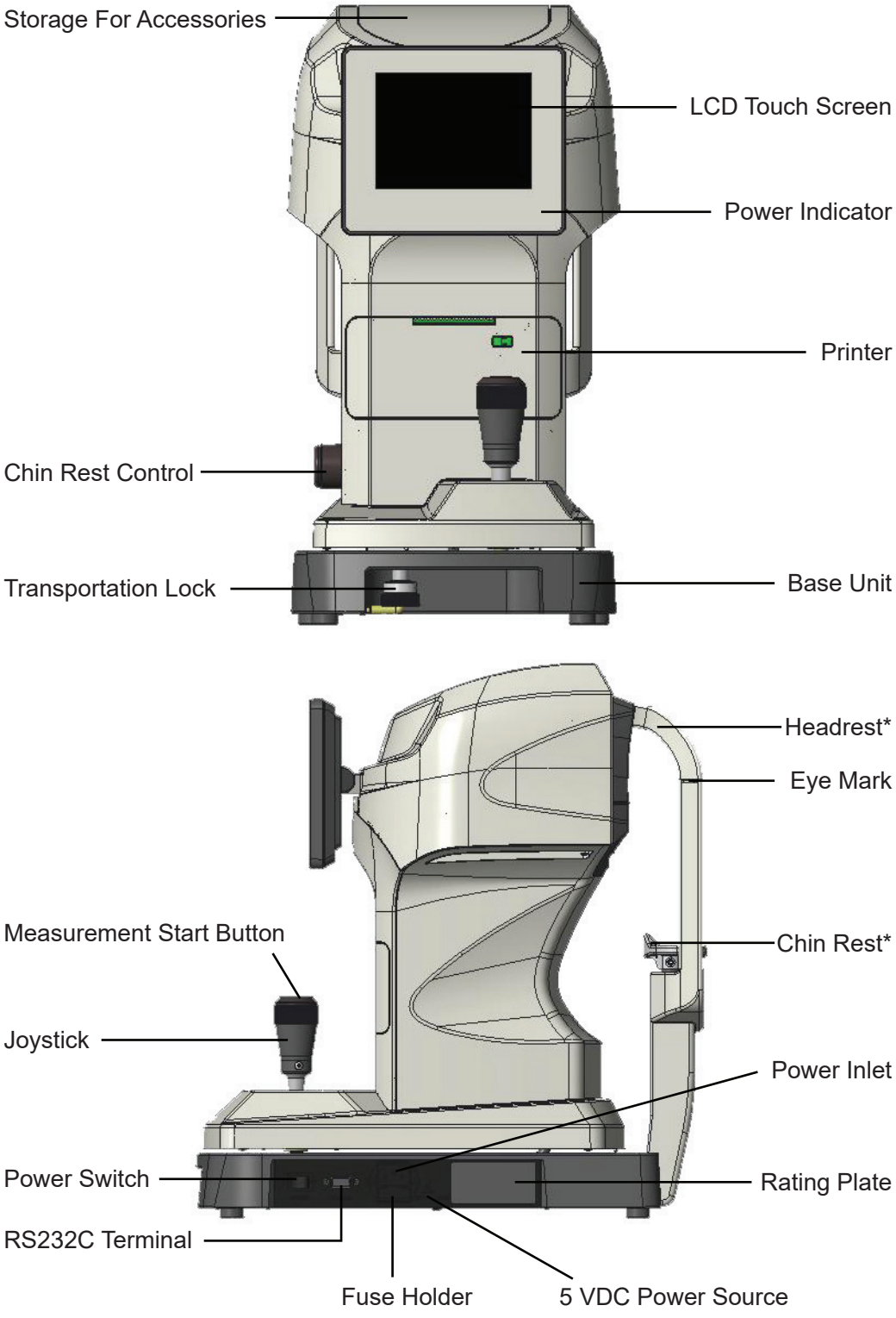

* Type B Applied Parts.

Instrument Setup (continued)

Icon Definition

The OptoChek incorporates a user-friendly icon/menu-based operating system which will increase the speed of measurements, training, and use. Below are the Icons which are used during the operation of this instrument.



Keratometric Reading Mode - Displays Keratometer data.



Refraction Reading Mode - displays refraction data.



R/K Reading Mode - displays refraction and keratometer data.



Contact Lens Mode - Indicates zero (0) mm vertex distance



Vertex Distance - data with a 10, 12, 13.5, or 15 mm distance.



Scotopic Pupil Size - Measurement of PPS or SPS


IOL Reading Mode - Reduces measurement illumination.


Print Data - Prints Measurement Data


Export Data - Exports Measurement Data


Print & Exports Data - Prints & Exports Measurement Data


Clear - Deletes current Measurement Data

Control Buttons


Down Arrow - Move down in list.


Up Arrow - Move up in list.


Left Arrow - Move left in list


Right Arrow - Move right in list


Cancel


Next Menu Screen


Previous Menu Screen


Increase Value


Decrease Value


Return


OK


Settings

RS232C Output

This device is connected to a PC (or other device) by RS-232C.

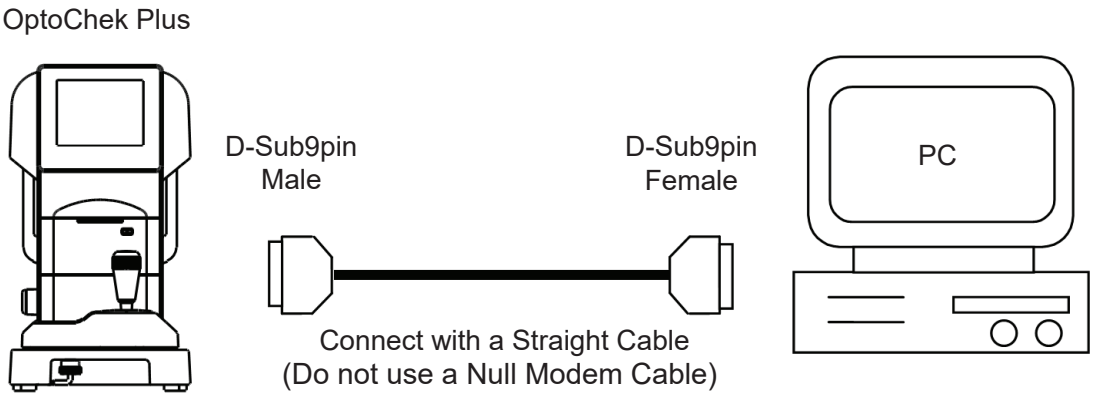

Figure IS-6. RS232 Cable Connection

Connecting Diagram: RS-232C

D-Sub9pin			D-Sub9pin	
TXD	2	———	2	RXD
RXD	3	———	3	TXD
GND	4	———	4	GN

Figure IS-7. RS232 Pinout Connections

Note: Use the shielded wire for the connection cable to protect the output data from noise.

Contact your local distributor about operation, connection method and output data etc.

The instruments which are connected to this device by RS-232C should comply with the safety standard of IEC 60601-1 or IEC 60950.

Select the baud rate of RS-232C from below.

Selectable Baud Rate	Default Setting
9600bps	Default
38400 bps	Optional
115200 bps	Optional

Figure IS-8. RS232 Baud Rates

Note: The following RS-232C options cannot be modified and are set at the factory:
Character = 8 bits, Parity = none, Stop Bit = 1

Precautions Regarding the IT Network

This device can output data to a PC through an RS232C interface.

Connection of this device to an IT network that includes other equipment could result in previously unidentified risks to patients, operators or third parties.

The responsible organizations should identify, analyze, evaluate and control these risks.

Subsequent changes to the IT network could introduce new risks and require additional analysis.

Changes to the IT-network include:
- Changes in the IT network configuration
- Connection of additional items to the IT network
- Disconnecting items from the IT network
- Update of equipment connected to the IT network
- Upgrade of equipment connected to the IT network
- Subsequent changes to the IT network

Please contact your distributor about the details of this device.

Transportation of the OptoChek

1. If transportation of this instrument is required, align the center of the top section with the center of the base and secure it by tightening the Transportation Lock.

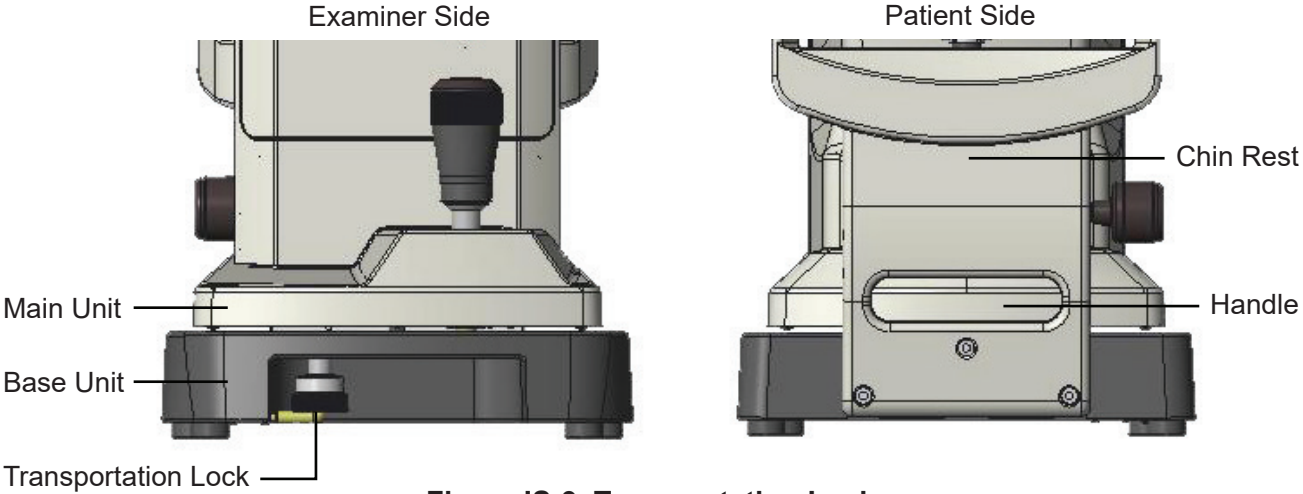

Figure IS-9. Transportation Lock

2. The Transportation Lock can be tightened by pushing it up and rotating it in counterclockwise direction.

CAUTION: DISCONNECT THE POWER CORD BEFORE MOVING THE INSTRUMENT OR MALFUNCTION OR DAMAGE TO THE UNIT MAY OCCUR.

3. If transportation is required, hold the back and front of the base unit (the cutout of the front side and the handle under the chinrest) with both hands securely. DO NOT hold the headrest, chinrest or LCD monitor because it can result in damage or malfunction of the unit.

Instrument Setup (continued)

Instrument Settings

This instrument has default parameters that may be changed to accommodate user preferences for each setting. Refer to the illustration below.

Press the UP or DOWN arrow to select the desired setting, then the LEFT/RIGHT arrow to change the parameter for the desired setting. After completing changes, press the RETURN arrow to exit the setup mode. Setting descriptions are as follows:



STEP — Rounding mode for the refractive measurements. Available options are: 0.25, or 0.12 Diopters.

VD(mm) — Vertex Distance for the refractive measurements. Options are: 0, 10, 12, 13.5, or 15 millimeters.

IOL — Refraction and keratometric data with IOL filtering
Option is either ON or OFF.

CYL — Format in which the refractive prescription is displayed.
Options include: –Cyl, +Cyl, or ±Cyl mode.

START — Sets the measurement Mode.
Auto-Quick: Acquires 1 K and 3 R readings.
Auto: Acquires 1 K and 3 R readings.
Manual: Requires pressing the Measurement Start Button on the top of the Joystick.

REF — Option for the number of readings when the START option is set to Manual.
Normal: 1 K and 1 R measurement.
Quick 3: 1 K and 3 R measurements.

KER — Units of measurement of the keratometric reading. Options are: Radius (mm), or Diopter (D).

SPH EQU — Outputs the spherical equivalent of the refraction data.

Instrument Settings (Continued)

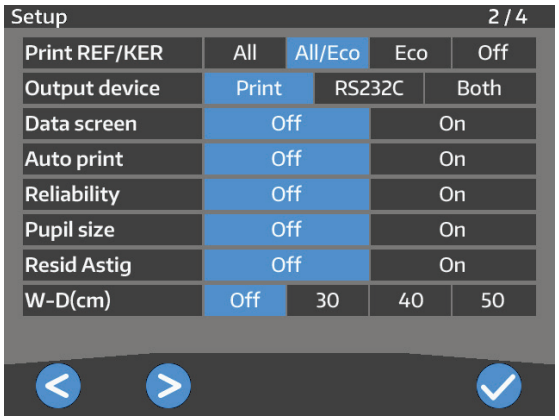

PRINT REF/KER — Select the format of print-out.
ALL: Print out all of the measurement data. (Maximum of 10 for each eye.)
ALL/ECO: Print out all of the REF measurement. (Maximum of 10 for each eye.)
Print out only the optimum values for the Kerato measurement.
ECO: Print out only the optimum values.
OFF : No measurement result is printed out.

Note: Exported values sent to the RS232C output.

OUTPUT DEVICE — Selection of Print only, RS232C Export only, or both Print and RS232C output.

DATA SCREEN — Display the stored measurement results.
ON: Displays the measurements screen.
OFF: Displays no measurement screen.

AUTO PRINT — Selects the print-out method. This function is valid only when the setting of START is set to either Auto-Quick or Auto.
ON: Enable the auto print function.
OFF: Disable the auto print function.

RELIABILITY — Selects if the low reliability mark is displayed adjacent to the measurement value.
ON: If the measurement value has a low reliability signal, the low reliability mark (“*”) is displayed.
OFF: No low reliability mark is displayed.

PUPIL SIZE — Sets the function of the photopic pupil diameter measurement.
ON: Takes a measurement of the photopic pupil diameter when taking a refractive measurement.
OFF: Photopic pupil diameter is not measured.

RESID ASTIG — Selects the output of residual astigmatism on the display and printout (if enabled).
ON: Displays the residual astigmatism.
OFF: No astigmatism displayed.

W-D(cm) — Sets the working distance.
The near pupil distance is automatically computed after the measurement and displayed on the screen.

Instrument Settings (Continued)

TARGET	Sets the brightness of the patient target light. Options are: Bright, Middle, or Dark.
BRIGHTNESS	Adjust or change the brightness of the LCD monitor.
SLEEP	Time period of inactivity when the sleep mode activates. In this mode the LCD screen is set OFF and the green LED (at the bottom right of the LCD) is ON. Options are: 3, 5, or 10 minutes, or OFF (LCD always on).
BAUD RATE	Sets the baud rate for transmitting data out the serial port. Options are: 115200, 38400, or 9600 bps. (Default is 9600 bps)
TONE	Volume level for the audible (beep) indicator. Options are: ON or OFF.
PRACTICE	Displays a screen to input the name of the doctor, practice, or user defined information on the printout. The displayed information can be up to 24 characters.
SET ID#	Sets the starting ID number of the patient being tested.
PRINT ID#	Prints Patient ID# on the selected output.
DISPLAY ID#	Displays Patient ID# on the measurement screen.





Instrument Settings (Continued)

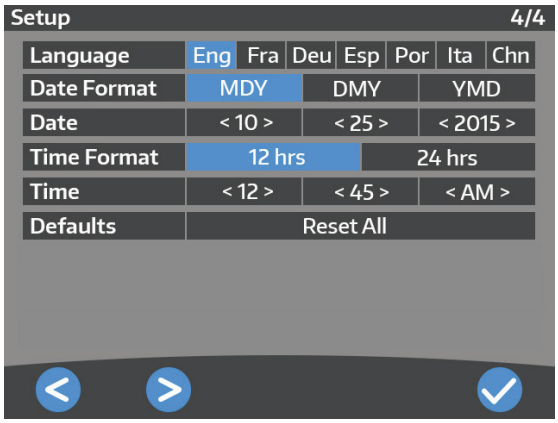

LANGUAGE — Option to set the language of the user interface ENG (English), FRA (French), DEU (German) ESP (Spanish), POR (Portuguese), ITA (Italian), CHN (Chinese). Touch the option on the screen to select it.

DATE FORMAT — An option is available to change the date in the instrument to the following formats:
MDY: Display the date as month/day/year.
DMY: Display the date as day/month/year.
YMD: Display the date as year/month/day.

DATE — This option has 3 fields for the month, day, and year which can be changed to the current date.

TIME FORMAT — The display of the time format can be selected for either 12 or 24 hour format.

TIME — This option has 3 fields for the hour, minute, and AM or PM.

DEFAULTS — The instrument Defaults can be reset by activating RESET ALL.
The defaults as set from the factory are:
Screen 1: Step = 0.25, VD =13.5, IOL = Off, CYL = "-," Start = Auto-Quick, Ker = mm, Sph Equ = Off
Screen 2: Print Ref/Ker = All/Eco, Output Device = Print, Data Screen = Off, Auto Print = Off, Reliability = Off, Pupil Size = Off, Resid Astig = Off, W-D(cm) = Off
Screen 3: Target = Middle, Brightness = Middle, Sleep = 3, Baud Rate = 9600, Tone = On, Print ID# = Off, Display ID# = Off
Screen 4: Language = Eng, Reset Screen = On, Date Format = MDY, Time Format = 12 hrs.

Operation

The OptoChek Plus is an advanced electronic refractometer/keratometer which quickly acquires precise data of the human eye. The information below will assist you in detailing the initial steps to obtain optimum performance of this instrument.

Perform the following steps after removing the OptoChek Plus from its shipping container.

1. Install the unit in its permanent location and release the Transportation Lock by turning the locking collar counterclockwise.
2. Remove the plastic protector that is installed onto the LCD Screen to prevent scratches and contaminants on the screen.
3. Install an adequate supply of Chin Rest Liners onto the Chinrest and secure them with the Chin Liner Pins.
4. Install the printer paper as indicated below.
5. Connect the power cord to the unit.

CAUTION: CONNECT THE POWER CORD WITH PROTECTIVE EARTH TO THE THREE-CORE SOCKET WITH GROUNDING TO AVOID POSSIBILITY OF ELECTRIC SHOCK AT THE TIME OF ELECTRIC LEAKAGE.

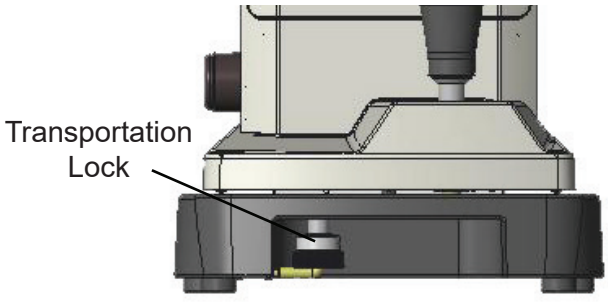

Figure OP-1. Transportation Lock

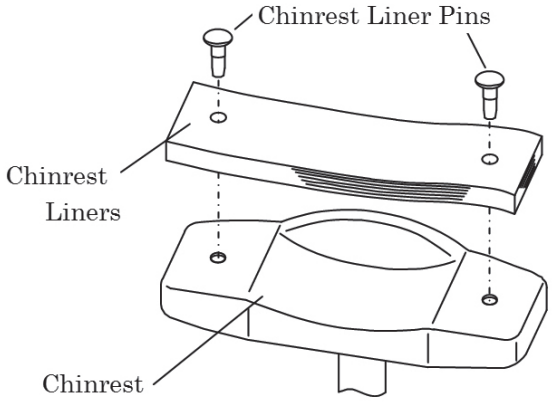

Figure OP-2 Chinrest Papers

Printer Paper Installation

1. Press the Door Release button to open the Printer door. Refer to Figure OP-3.
2. Unroll a small amount of paper and install a new roll in the printer compartment so that the paper rolls out from the top of the roll over the top of the Printer Door.
3. Close the Printer Door by pressing in the center of the door under the paper, and tear off the excess paper. Refer to Figure OP-3.

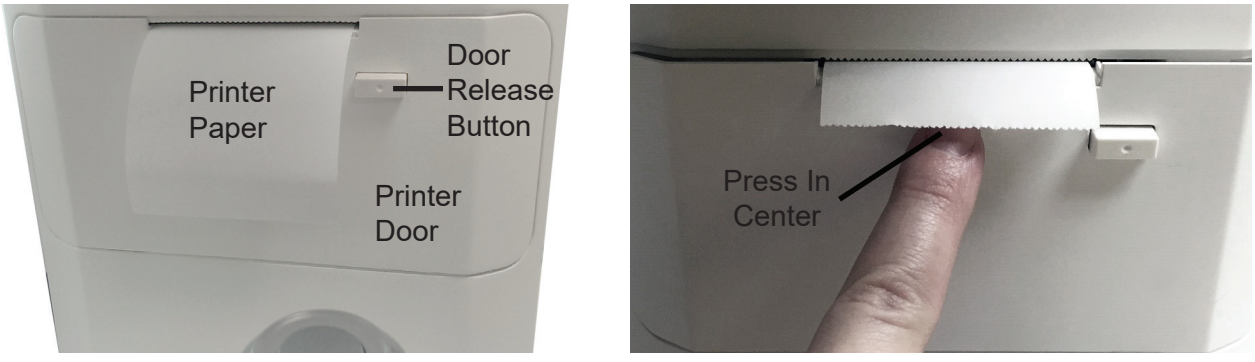

Figure OP-3. Printer Paper Installation

Measurement Modes

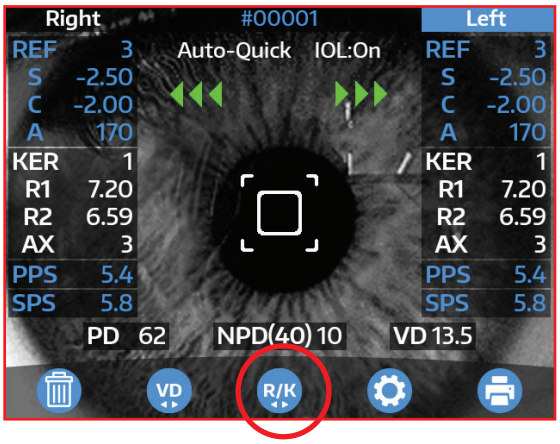

The OptoChek Plus has five measurement modes:

R/K	Refraction and keratometric
R	Refraction only
K	Keratometric only
IOL R/K	Refraction and keratometric, utilizing IOL filtering
IOL R	Refraction only, utilizing IOL filtering

Note: When power is applied to the OptoChek Plus, the instrument automatically displays the last used measurement mode.

Note: When acquiring IOL patient data, it is recommended that the IOL option be used. Using IOL filter options for non-IOL patients may cause occasional measurement difficulty for patients with reduced pupil diameters.

The following information describes the correct method for acquiring refractor and keratometer measurements using the OptoChek Plus.

1. Clean the chinrest and dispose of the chinrest liner on the top. Refer to the *Cleaning & Maintenance* section of this manual.
2. Ask the patient to place their chin on the chinrest and then move their head forward until their forehead is placed against the Headrest.

Note: Uncomfortable posture may fatigue the examinee during the measurement and may cause measurement difficulty. Adjust the chinrest on the instrument to the patient height so they are comfortably positioned on the chinrest.

Note: The measurement accuracy is affected if the examinee moves their head during the measurement. Ask them to not move their forehead on the headrest and look at the target with a good posture.

Note: If the eyelid is over the Keratometer ring, ask the examinee to open their eye wider.

3. Adjust the Vertical Alignment Knob (refer to *Instrument Setup*, *Parts Identification* for the location of the Vertical Adjustment Knob) and adjust the joystick until the patient's eye is centered on the screen with their right eye.
4. Adjust the joystick left and right, in and out, and up and down until the green box is centered in the circle and the green PLUS icon (+) is in the center of the square.
   Refer to the image below for correct alignment.
   - If the instrument is aligned too close to the patient then move the joystick away from the patient until aligned. Refer to the image below for the Too Close alignment.
   - If the instrument is aligned too far from the patient then move the joystick closer to the patient until aligned. Refer to the image below for the Too Far alignment.



Too Close to Patient

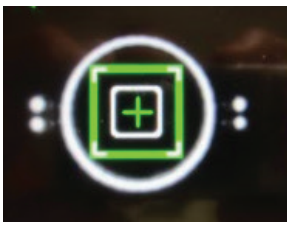

Correct Alignment of Patient



Too Far from Patient

Measurement Modes (Continued)

Note: If the instrument is set for the AUTO mode, the measurements will automatically be taken when alignment is achieved.

Note: If the instrument is set for the MANUAL mode, the Measurement Start Button must be depressed to acquire a measurement when alignment is achieved.

5. Repeat the above steps for the left eye.
6. Press the PRINT icon if a print-out or the Export icon if data output of the of the measurements is desired.

Note: To set the Print output function, refer to the *Instrument Setup* section of this manual.

Screen Modes

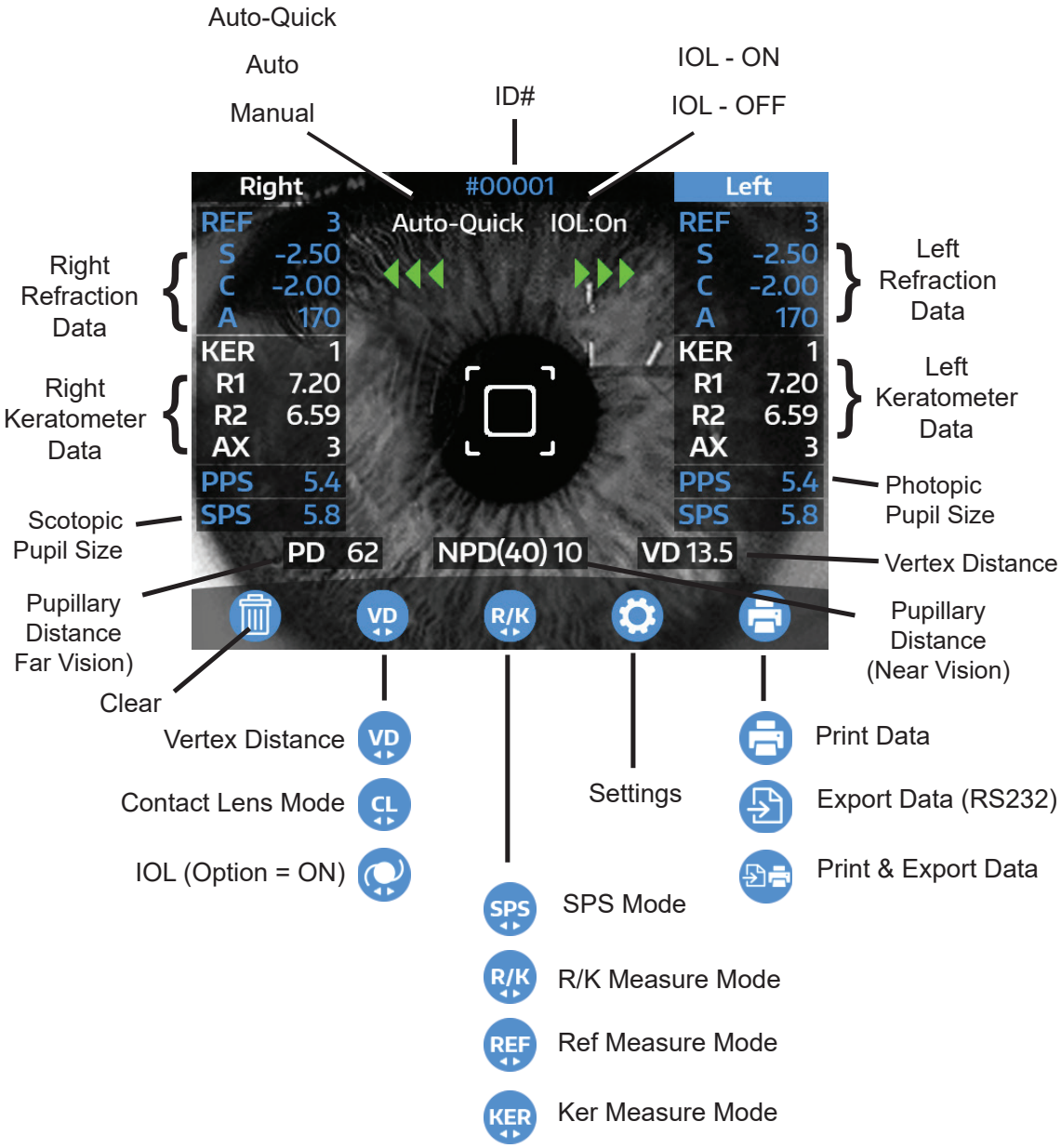

Data Screen Function

The measurement results can be displayed on the screen and checked by using the data screen function.

1. Set the “Data Screen” option in SETUP to “On.”

Note: When the “Data Screen” is set to “On,” the measurement data of the right eye is displayed regardless of the settings of “Print REF/ KRT.”

2. With the Data Screen option On, touch the print icon after the measurement.

Note: When the “Auto Print” is set to ”On,”the measurement data of the right eye is displayed regardless of the settings of “Print REF/ KRT.

3. The screen is switched to the other eye as indicated below by pressing the Right Arrow icon while the data is displayed.

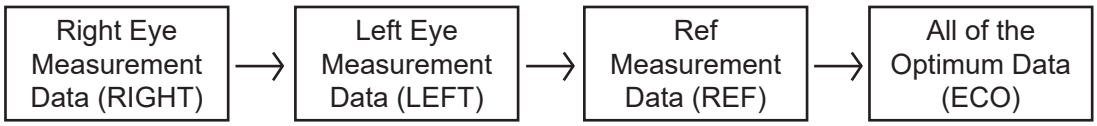

4. Print the data displayed on the screen.
   - Touch the print icon to print out the data.
   - If the Auto Print function is ON, then the data will automatically be displayed after all measurements (Left and Right) have been acquired.

5. The instrument returns to the measurement mode by touching the OK icon.

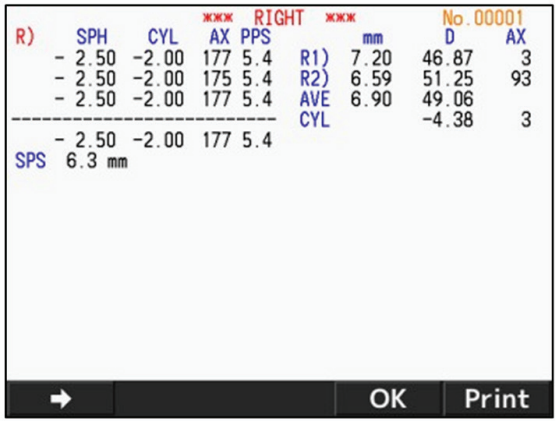

Power Saving Function

The unit will go to sleep if it is left on without pressing any icons. Refer to the *Instrument Settings* section of this manual for more information about the sleep mode function.

To wake the unit up from sleep mode, press the Measurement Start button or touch the LCD Touch Screen.

Note: When the unit is in sleep mode, the power light will go from a solid green light, to a blinking green light.

Sample Printout

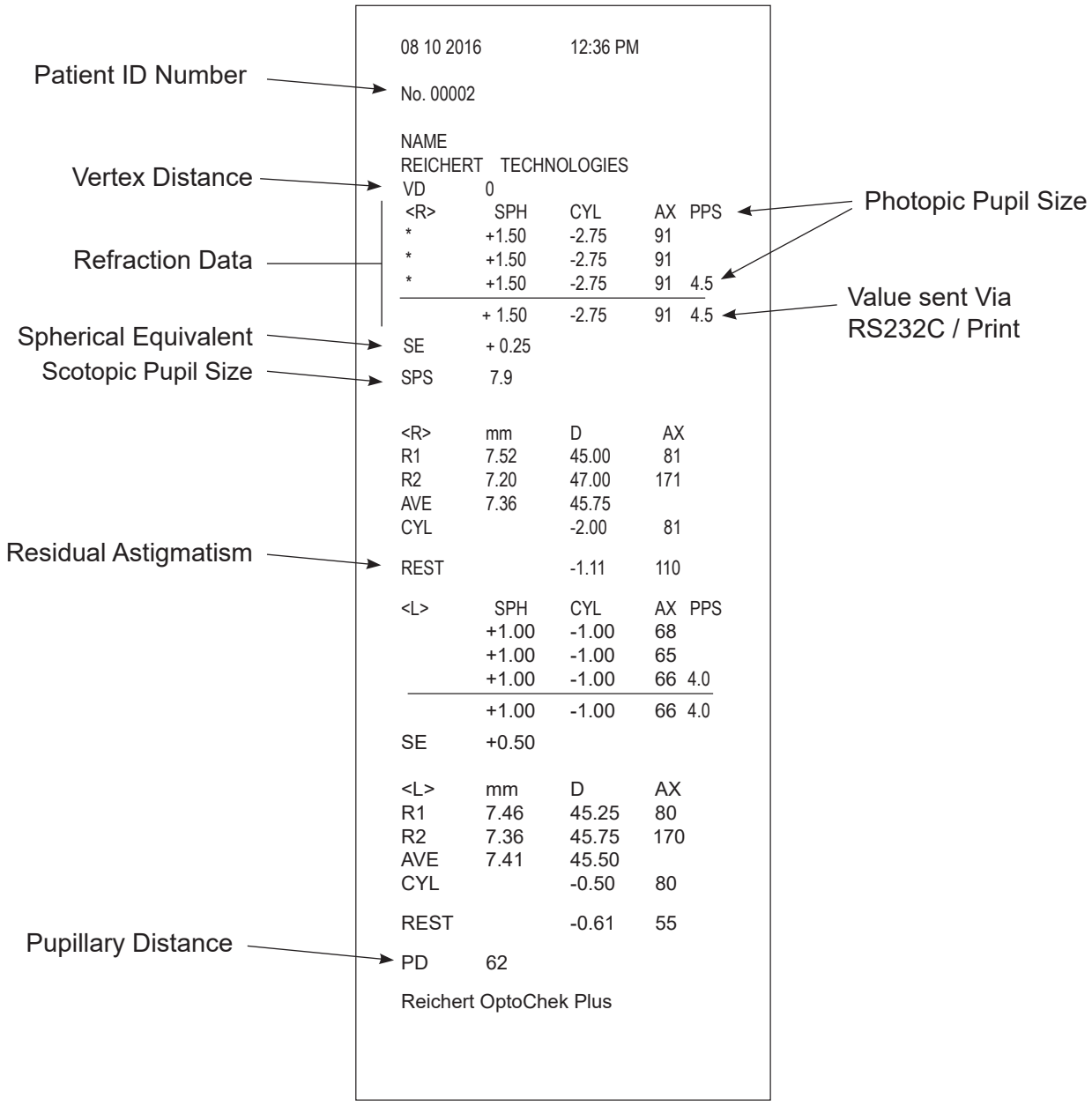

Measuring Contact Lenses

Measurement of Base Curve

This device can measure the base curve of a hard contact lens. The lens can be measured by placing it onto the contact lens holder of the Model Eye shown as below.

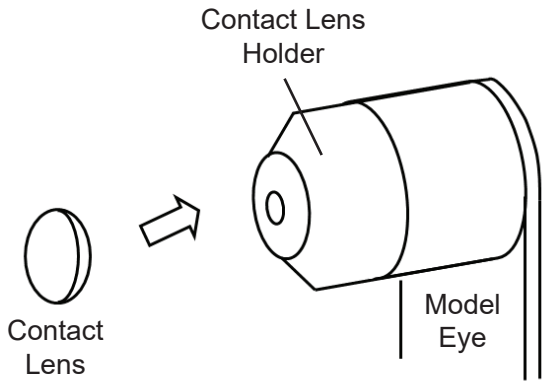

Figure OP-4. Contact Lens Measurement Setup

1. Put a small amount of water on the concave side of the contact lens holder.
2. Place the contact lens so that its convex side faces the holder.
3. Then, take a measurement by setting the Model Eye unit on the main unit.

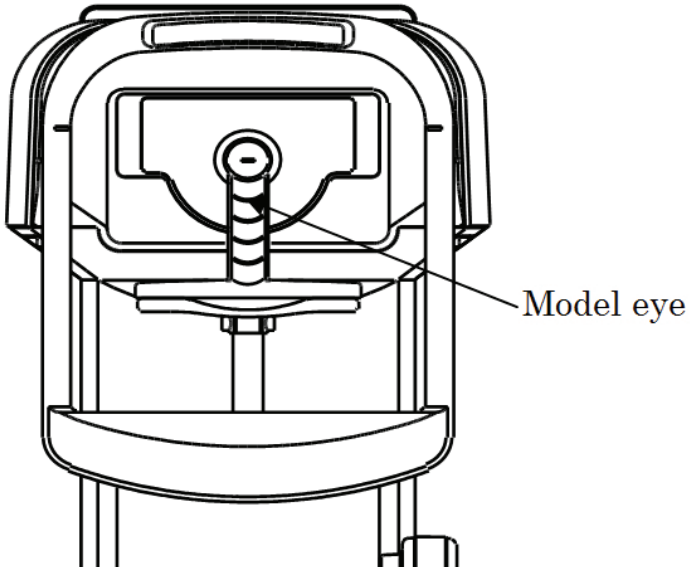

Figure OP-5. Contact Lens Measurement

Tips for Effective Measurements

1. Minimize external light in the exam room for accuracy of measurement.
2. Ask the examinee to focus on the target and not look around at anything else.
3. Explain to the examinee and assure them that there will be no discomfort during measurement.
4. Adjust the chinrest or the chair for best patient comfort.
5. Ask the examinee to open their eye wide during the measurement process.
6. If the pupil of the patient eye is smaller than the minimum measurable pupil diameter, the OptoChek Plus will display an error.
7. If it is difficult to take a measurement because the pupil is too small, darken the exam room or the target light (Refer to Instrument Settings, Target Light) to allow the pupil to dilate as much as possible.
8. Ask the patient not to move during a measurement. If the examinee moves while a measurement is acquired the AXIS value may be adversely affected.

Maintenance & Cleaning

Printer Paper Replacement

Refer to the *Operation*, *Printer Paper Installation* section of this manual for directions how to install the printer paper.

Fuse Replacement

CAUTION: UNPLUG THE POWER CORD FROM THE UNIT BEFORE REMOVING THE FUSE HOLDER. YOU MAY BE IN DANGER OF ELECTRIC SHOCK IF REMOVING THE FUSE HOLDER WITHOUT UNPLUGGING THE POWER CORD.

When a fuse is blown, remove the fuse holder from the device to change the fuses.

1. Unplug the power cord from the unit before removing the fuse holder.
2. Push the two tabs toward the center and pull out the fuse holder.
3. Install new fuses (P/N RFAG20039) into the Fuse Holder. Refer to Figure MC-1.

Note: When ordering replacement fuses from Reichert, use only the part number listed above.

Note: Any fuse meeting the specifications listed in the Specifications section of this manual may be used in the device.

4. Replace the fuse holder by installing it in its original location and correct orientation.

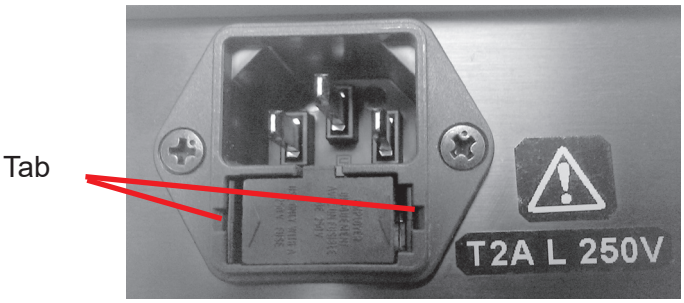

Figure MC-1. Contact Lens Measurement

Chinrest Paper Replacement

Set the chinrest liners onto the chinrest and secure them with the chinrest pins (refer to the diagram on the right).

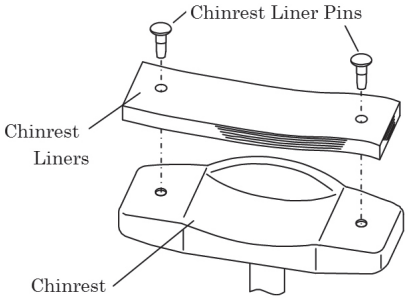

Note: For sanitary reasons, dispose the top chinrest liner after every patient.

Power Cord Replacement

Replace the power cord with the following P/N's. When ordering a replacement power cord, use only the part numbers listed below.

- Power cord - 120 V (P/N WCBL10018)
- Power cord - 230 V (P/N WCBL10027)

Maintenance & Cleaning (Continued)

Confirmation of Measurement Accuracy

Check the operation and readings of the device using the supplied Model Eye. If the measurement result of the Model Eye is within the tolerance listed below, the measurement is considered as reliable and accurate. If the result exceeds the tolerance, contact your dealer immediately.

Note: The Sphere value (for vertex distances (VD) of 12 and 0) and the R value are indicated on the Model Eye.

Model Eye Tolerance Data		
SPH	CYL	R
±0.25	0±0.25	±0.03

Model Eye Measurement

1. Locate the Model Eye and Remove the contact lens holder from the end of the eye to show its reference surface.
2. Remove the chinrest papers from the chinrest.
3. Set the Model Eye carefully onto chin rest and secure it with the chinrest pins.
4. Ensure that the vertex distance is set properly on the OptoChek Plus.
5. Align the Model Eye in front of the patient window by adjusting the Chinrest Control up or down as needed.
6. When the Model Eye is aligned properly, take a measurement.

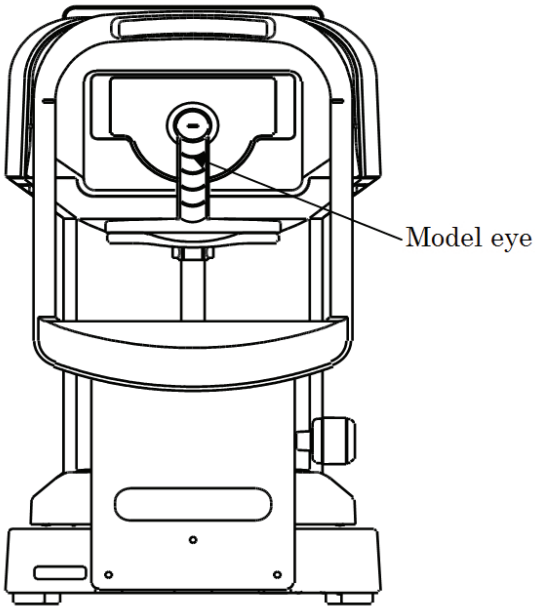

Measuring Window Filter Cleaning

Clean the Measuring Window Filter with a clean, soft cloth moistened with lens cleaner that is safe for plastic lenses.

CAUTION: DO NOT USE ALCOHOL ON THE MEASURING WINDOW FILTER OR DAMAGE WILL OCCUR.

Eye Lens Cleaning

Clean the Eye Lens with a clean, soft cloth moistened with alcohol.

Model Eye Cleaning

Clean the Model Eye with a clean, soft cloth moistened with alcohol.

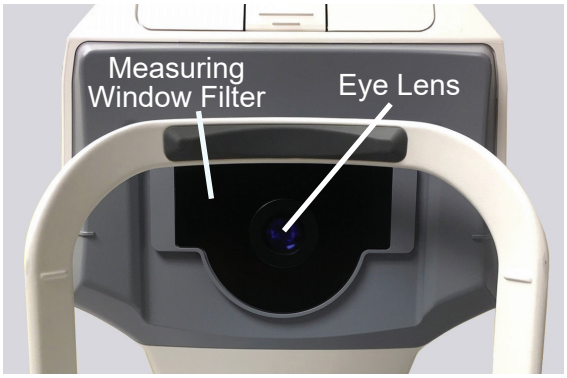

Maintenance & Cleaning (Continued)

Cleaning

When cleaning the device, use one of the following approved cleaning solutions:

- Soap and Water
- 70% Isopropyl Alcohol
- 5.25% Bleach and Water Solution
- 7.5% Hydrogen Peroxide and Water Solution
- Sani-cloth* Prime Germicidal Wipes (Didecyl Dimethyl Ammonium Chloride, isopropyl alcohol and ethyl alcohol.)

This device is a precision optical device. Always handle it with care and do not drop it. Do not touch the optical parts, such as a view window, with your hands and be sure to avoid dust because its measurement accuracy could be adversely affected. It is not necessary to replace the soft pad on the chinrest and headrest as this material complies with ISO 10993-1. If the device is not used for a long period of time, remove the power cord from the power outlet and cover it with the supplied dust cover. If the device fails to function properly, do not try to repair any internal parts of this instrument, contact Reichert as indicated on the ***Introduction*** section of this manual.

External Cleaning

Clean the external surfaces of this instrument, the headrest, and the chinrest using a clean, soft cloth moistened with an approved cleaning solution.

Operator Display Cleaning

Use a clean, soft cloth moistened with an approved cleaning solution. Do not use any chemical solvent, acidic, or alkali solution.

* Sani-Cloth is a registered trademark of PDI, Inc., Woodcliff Lake, NJ.

Troubleshooting

Troubleshooting

This device automatically evaluates measurement condition or measurement results and indicates error messages if the measurements are invalid. Error messages also appear when abnormality is detected in the instrument operation. If a measurement error message appears, check the system with the supplied Model Eye. If the Model Eye measurement is good, then reposition and re-measure the patient. If the measurement error persists, perform further evaluation on the patient eye.

CAUTION: NEVER DISASSEMBLE, MODIFY OR ATTEMPT TO REPAIR THIS DEVICE. THIS CAN RESULT IN ELECTRICAL SHOCK.

<table>
<tr><th>Message</th><th>Probable Cause</th><th>Possible Solution</th></tr>
<tr><td>Retry.</td><td>Failed to capture eye image because the examinee blinks or moves during measurement.
The examined eye has eye diseases.</td><td>Reposition patient and measure the patient again. If message persists, contact your Reichert Authorized dealer.</td></tr>
<tr><td>SPH over.</td><td>Exceeded spherical measurement range (-25 to +25D)
(In case of VD=0, contact value).</td><td rowspan="3">Perform measurement using the Model Eye and verify correct operation. If message persists, contact your Reichert Authorized dealer.</td></tr>
<tr><td>CYL over.</td><td>Exceeded cylindrical measurement range (0 to ±10D)
(In case of VD=0, contact value).</td></tr>
<tr><td>Err.</td><td>Exceeded measurement value of pupil diameter (2.0 to 8.5mm).</td></tr>
<tr><td>Target motor fault.</td><td rowspan="2">Detected abnormality in motor control system.</td><td rowspan="2">Turn off the power and turn it back on. Consult your dealer immediately if the message appears again.

Do not try to repair it by yourself.</td></tr>
<tr><td>Focus motor fault.</td></tr>
<tr><td>EEPROM fault .</td><td>Failure of initialization.</td></tr>
<tr><td>Printer overheated.</td><td>Printer head is overheated.</td><td>Turn off the power and turn it back on. Consult your dealer immediately if the message appears again.
Do not try to repair it by yourself.</td></tr>
<tr><td>Printer cover opened.</td><td>Printer cover is opened.</td><td>Close the printer cover properly. Turn off the power and turn it back on. Consult your dealer immediately if the message appears even after closing the cover.</td></tr>
<tr><td>Paper empty.</td><td>No printer paper.</td><td>Install the printer paper as indicated in the Maintenance & Cleaning section of this manual.</td></tr>
</table>

Troubleshooting (continued)

If any of the symptoms below occur, refer to the table below to take the appropriate measures.

Symptoms	Causes and Solutions
The LCD Touch Screen and the power indicator are not turned on.	• The power cord may not be properly connected. Make sure to connect it securely. • The fuse may be damaged. If so, replace it with the new one. • The replacement fuse is damaged again when the power switch is turned on. Contact your local distributor immediately.
The LCD Touch Screen display suddenly disappears.	• Sleep mode may be activated. Press the ON/OFF switch to turn the instrument on.
Joystick not moving properly.	• The Transportation Lock is engaged. Disengage the lock. • If the joystick is not moving appropriately, do not move the part forcibly. Contact your local distributor or service person.
Printer does not print out.	• Check that the paper is correctly installed. Reload the printer paper as needed. • The setting of Print REF/KRT may be set as OFF. Change the setting to ON.
The printer paper comes out but there is no printing on the paper.	• The printer paper may be set in a wrong direction. Refer to *Operation* / *Printer Paper Installation* in this manual.
The date setting is inaccurate.	• Refer to the Time settings in the *Instrument Settings* section of this manual and reset the time.

Contact your local distributor immediately if any of the symptoms indicated above do not improve after performing the solutions indicated above.

Specifications

Catalog Number 15170

Refractive measurement range	Sphere (S)	-30D to +22D	(In case of VD=12) (Step: 0.12/0.25D)
	Cylinder (C)	0 to ±10D	(Step: 0.12/0.25D)
	Axis angle (A)	1 to 180°	(Step: 1°)
Corneal curvature radius measurement	Radius of curvature	5.0 to 10.0 mm	(Step: 0.01 mm)
	Corneal power	33.75 to 67.5D	(Corneal refractive n=1.3375) (Step: 0.12/0.25D)
	Degree of corneal astigmatism	0 to ±10D	(Step: 0.12/0.25D)
	Axis angle	1 to 180°	(Step: 1°)
Pupil diameter measurement	Measurement range	Ø2.0 to 8.5 mm	(Step: 0.1 mm)
PD measurement	Measurement range, 85 mm (Step: 1 mm)		
Vertex distance	0, 10, 12, 13.5, 15 mm		
Minimum pupil diameter	Ø2.0 mm		
Measurement time	Refractive measurement		Approx. 2.0 sec.
	Corneal curvature radius		Approx. 0.07 sec.
Printer	Thermal line printer (Paper width: 58mm)		
Internal monitor	145 mm (5.7 inches) color LCD monitor		
Positioning range of the measurement unit	Front/Back ±22 mm	Right/Left ±43 mm	Up/Down ±17 mm
Vertical adjustment range of the chinrest	±30 mm	502 mm (Up) 419 mm (Down)	
Output	RS-232C		

Specifications (continued)

Catalog Number: OptoChek Plus **15170**

Physical Dimensions

Size:
Weight, unpacked: Approx. 12.8 kg (28.2 lbs.)
Height: 46.4 cm (18.3 in.)
Width: 22.9 cm (9.0 in.)
Depth: 42.9 cm (16.9 in.)

Electrical:
Input Power: 100 to 240V @ 50/60Hz, 60 VA
Fuse: T2AL 250 VAC
Bluetooth Power Source: 5 VDC ± 5% @ 200 mA (typical)
Power saving function: OFF, 3, 5, 10 min. (switchable)

Operational Conditions
The Environmental conditions are as follows:

Operating: Temperature: 10° C (50° F) to 40° C (104° F) Relative Humidity: 30% to 90% Atmospheric Pressure: 80 (23.6 in. Hg) to 106 kPa (31.3 in. Hg)	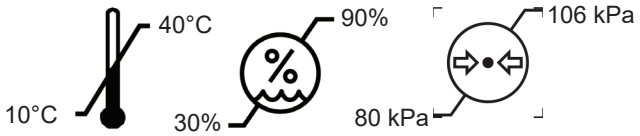
Storage: Temperature: -10° C (14° F) to 55° C (131° F). Relative Humidity: 10% to 95% (non-condensing) Atmospheric Pressure: 70 (20.7 in. Hg) to 106 kPa (31.3 in. Hg)	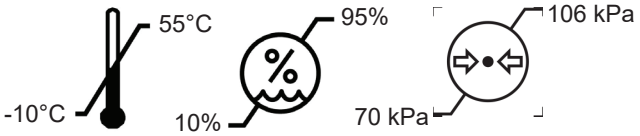
Transportation: Temperature: -40° C (-40° F) to 70° C (158° F). Relative Humidity: 10% to 95% (non-condensing) Atmospheric Pressure: 50 (14.8 in. Hg) to 106 kPa (31.3 in. Hg)	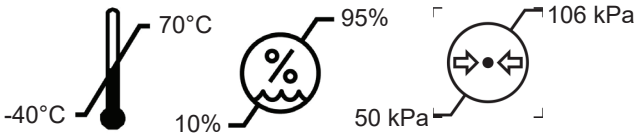

Exposure to the extreme temperature conditions indicated above must not exceed 15 weeks.

Disposal

This product does not generate any environmentally hazardous residues. At the end of its product service life, follow your local laws and ordinances regarding the proper disposal of this equipment.

Software Revision

The software revision can be obtained by contacting Reichert, Inc.
The serial number identifies the manufacture date and will provide access to the software version.

Classification

Type of protection against electrical shock: Class I Equipment

Class I equipment is equipment in which protection against electric shock does not rely on basic insulation only, but which includes an additional safety precaution in that means are provided for the connection of the equipment to a protective earth conductor in the fixed wiring of the installation in which a way which accessible metal parts cannot become live in the event of a failure of the basic insulation.

Degree of protection against electrical shock: Type B Equipment.

Type B equipment provides an adequate degree of protection against electrical shock, particularly regarding allowable leakage currents and reliability of the protective earth connection.

Degree of protection against harmful intrusion of water (IEC 60529): IPX0. This product does not provide protection against intrusion of water.

Classification by safety of use in air/ flammable anesthetic gas, oxygen or nitrous oxide/ flammable anesthetic gas atmosphere:

- Equipment not suited for use in air/flammable anesthetic gas, oxygen or nitrous oxide/flammable anesthetic gas atmosphere.
- This product should be used in an environment free of flammable anesthetic gas and other flammable gases.

Classification by operation mode:
Continuous operation with short-time loading.

Mode of Operation:
This product is for continuous operation. It takes approx. 2 sec. for each measurement.

Table 201 – Guidance and Manufacturer's Declaration

Electromagnetic Emissions

All Equipment and Systems

Guidance and Manufacturer's Declaration – Electromagnetic Emissions

The OptoChek Plus is intended for use in the electromagnetic environment specified below. The customer or user of the OptoChek Plus should ensure that it is used in such an environment.

Emissions Test	Compliance	Electromagnetic Environment - Guidance -
RF Emissions CISPR 11	Group 1 Class A	The OptoChek Plus uses RF energy only for its internal function. Therefore, its RF emissions are very low and are not likely to cause any interference in nearby electronic equipment.
Harmonics IEC 61000-3-2	Class A	The OptoChek Plus is suitable for use in all establishments, other than domestic establishments and those directly connected to the public low-voltage power supply network that supplies building for domestic power.
Flicker IEC 61000-3-3	Complies	

Note: The emissions characteristics of this equipment make it suitable for use in industrial areas and hospitals (CISPR 11 class A). If it is used in a residential environment (for which CISPR 11 class B is normally required) this equipment might not offer adequate protection to radio-frequency communication services. The user might need to take mitigation measures, such as relocating or re-orienting the equipment.

Table 202 – Guidance and Manufacturer's Declaration

Electromagnetic Immunity

All Equipment and Systems

Guidance and Manufacturer's Declaration – Electromagnetic Immunity

The OptoChek Plus is suitable for use in all establishments and is intended for use in the electromagnetic environment specified below. The customer or user of the OptoChek Plus should ensure that it is used in such an environment.

Immunity Test	IEC 60601 Test Level	Compliance Level	Electromagnetic Environment - Guidance
ESD IEC 61000-4-2	±8kV Contact. ±2kV, ±4kV, ±8kV, ±15kV Air.	±8kV Contact. ±2kV, ±4kV, ±8kV, ±15kV Air.	Floors should be wood, concrete or ceramic tile. If floors are synthetic, the r/h should be at least 30%.
EFT IEC 61000-4-4	±2kV Mains. ±1kV I/Os.	±2kV Mains ±1kV I/Os	Mains power quality should be that of a typical residential, commercial or hospital environment.
Surge IEC 61000-4-5	±0.5kV, ±1kV Differential. ±0.5kV, ±1kV, ±2kV, Common.	±0.5kV, ±1kV Differential. ±0.5kV, ±1kV, ±2kV, Common.	Mains power quality should be that of a typical residential, commercial or hospital environment.
Voltage Dips/Dropout IEC 61000-4-11	>95% Dip for 0.5 Cycle 30% Dip for 25 Cycles >95% Dip for 5 Seconds 100% Dip for 0.5 cycle at 0°, 45°, 90°, 135°, 180°, 225°, 270°, & 315° 100% Dip for 1 cycle at 0° & 180°	>95% Dip for 0.5 Cycle 30% Dip for 25 Cycles >95% Dip for 5 Seconds 100% Dip for 0.5 cycle at 0°, 45°, 90°, 135°, 180°, 225°, 270°, & 315° 100% Dip for 1 cycle at 0° & 180°	Mains power quality should be that of a typical residential, commercial or hospital environment. If the user of the OptoChek Plus requires continued operation during power mains interruptions, it is recommended that the OptoChek Plus be powered from an uninterruptible power supply or battery.
Power Frequency 50/60Hz Magnetic Field IEC 61000-4-8	30 A/m	30 A/m	If image distortion occurs, it may be necessary to position OptoChek Plus further from sources of power frequency magnetic fields or to install magnetic shielding. The power frequency magnetic field should be measured in the intended installation location to assure that it is sufficiently low.

Table 204 – Guidance and Manufacturer's Declaration

Electromagnetic Immunity

Equipment and Systems that are NOT Life-supporting

Guidance and Manufacturer's Declaration – Electromagnetic Immunity

The OptoChek Plus is intended for use in the electromagnetic environment specified below. The customer or user of the OptoChek Plus should ensure that it is used in such an environment.

Immunity Test	IEC 60601 Test Level	Compliance Level	Electromagnetic Environment - Guidance
Conducted RF IEC 61000-4-6	3 Vrms 150 kHz to 80 MHz 6 Vrms 150 kHz to 80 MHz in ISM and amateur radio bands.	(V1) = 3 Vrms (V1) = 6 Vrms in ISM and amateur radio bands.	Portable and mobile RF communications equipment should be no closer to any part of the OptoChek Plus, including cables, than the recommended separation distance calculated from the equation applicable to the frequency of the transmitter. Recommended Separation Distance: d=(3.5/V1)(Sqrt P) d=(3.5/E1)(Sqrt P) 80 to 800 MHz d=(7/E1)(Sqrt P) 800 MHz to 2.7 GHz Where P is the max output power rating of the transmitter in watts (W) according to the transmitter manufacturer and d is the recommended separation distance in meters (m). Field strengths from fixed transmitters, as determined by an electromagnetic site survey, should be less than the compliance levels in each frequency range. Interference may occur in the vicinity of equipment marked with the following symbol. 
Radiated RF IEC 61000-4-3	80 MHz to 2.7 GHz @ 10 V/m	(E1) = 10 V/m	

Note 1: At 80 MHz and 800 MHz, the higher frequency range applies.

Note 2: These guidelines may not apply in all situations. Electromagnetic propagation is affected by absorption and reflection from structures, objects and people.

* Field strengths from fixed transmitters, such as base stations for radio (cellular/cordless) telephones and land mobile radios, amateur radio, AM and FM radio broadcast and TV broadcast cannot be predicted theoretically with accuracy. To assess the electromagnetic environment due to fixed RF transmitters, an electromagnetic site survey should be considered. The measured field strength in the location in which the ME Equipment or ME System should be observed to verify normal operation. If abnormal performance is observed, additional measures many be necessary, such as re-orienting or relocating the ME Equipment or ME System.

* Over the frequency range 150 kHz to 80 MHz, field strengths should be less then [V1] V/m.

* The ISM (industrial, scientific and medical) bands between 0,15 MHz and 80 MHz are 6,765 MHz to 6,795 MHz; 13,553 MHz to 13,567 MHz; 26,957 MHz to 27,283 MHz; and 40,66 MHz to 40,70 MHz. The amateur radio bands between 0,15 MHz and 80 MHz are 1,8 MHz to 2,0 MHz, 3,5 MHz to 4,0 MHz, 5,3 MHz to 5,4 MHz, 7 MHz to 7,3 MHz, 10,1 MHz to 10,15 MHz, 14 MHz to 14,2 MHz, 18,07 MHz to 18,17 MHz, 21,0 MHz to 21,4 MHz, 24,89 MHz to 24,99 MHz, 28,0 MHz to 29,7 MHz and 50,0 MHz to 54,0 MHz.

Table 206 – Recommended Separation Distances between Portable and Mobile RF Communications Equipment and the OptoChek Plus for ME Equipment and ME Systems that are NOT Life-supporting.

Guidance and Manufacturer's Declaration - Electromagnetic Immunity

Recommended Separation Distances for between Portable and Mobile RF Communications Equipment and the OptoChek Plus

The OptoChek Plus is intended for use in the electromagnetic environment in which radiated RF disturbances are controlled. The customer or user of the OptoChek Plus can help prevent electromagnetic interference by maintaining a minimum distance between portable and mobile RF Communications Equipment and the OptoChek Plus as recommended below, according to the maximum output power of the communications equipment.

Max Output Power of Transmitter (W)	Separation (m) 150kHz to 80 MHz d=(3.5/V1)(Sqrt P)	Separation (m) 80 to 800 MHz d=(3.5/E1)(Sqrt P)	Separation (m) 800MHz to 2.7 GHz d=(7/E1)(Sqrt P)
0.01	0.12	0.12	0.23
0.1	0.38	0.38	0.73
1	1.2	1.2	2.3
10	3.8	3.8	7.3
100	12	12	23

For transmitters rated at a maximum output power not listed above, the recommended separation distance (d) in meters (m) can be estimated using the equation applicable to the frequency of the transmitter, where P is the maximum output power rating of the transmitter in watts (w) according to the transmitter manufacturer.

Note 1: At 80 MHz and 800 MHz, the separation distance for the higher frequency range applies.

Note 2: These guidelines may not apply in all situations. Electromagnetic propagation is affected by absorption and reflection from structures, objects, and people.

Warranty

This product is warranted by Reichert Technologies (herein after referred to as Reichert) against defective material and workmanship under normal use for a period of one year from the date of invoice to the original purchaser. (An authorized dealer shall not be considered an original purchaser.) Under this warranty, Reichert's sole obligation is to repair or replace the defective part or product at Reichert's discretion.

This warranty applies to new products and does not apply to a product that has been tampered with, altered in any way, misused, damaged by accident or negligence, or which has had the serial number removed, altered or effaced. Nor shall this warranty be extended to a product installed or operated in a manner not in accordance with the applicable Reichert instruction manual, nor to a product which has been sold, serviced, installed or repaired other than by a Reichert factory, Technical Service Center, or authorized Reichert Dealer.

Lamps, bulbs, charts, cards and other expendable items are not covered by this warranty.

All claims under this warranty must be in writing and directed to the Reichert factory, Technical Service Center, or authorized instrument dealer making the original sale and must be accompanied by a copy of the purchaser's invoice.

This warranty is in lieu of all other warranties implied or expressed. All implied warranties of merchantability or fitness for a particular use are hereby disclaimed. No representative or other person is authorized to make any other obligations for Reichert. Reichert shall not be liable for any special, incidental, or consequent damages for any negligence, breach of warranty, strict liability or any other damages resulting from or relating to design, manufacture, sale, use or handling of the product.

Patent Warranty

If notified promptly in writing of any action brought against the purchaser based on a claim that the instrument infringes a U.S. Patent, Reichert will defend such action at its expense and will pay costs and damages awarded in any such action, provided that Reichert shall have sole control of the defense of any such action with information and assistance (at Reichert's expense) for such defense, and of all negotiation for the settlement and compromise thereof.

Product Changes

Reichert reserves the right to make changes in design or to make additions to or improvements in its products without obligation to add such to products previously manufactured.

Claims for Shortages

We use extreme care in selection, checking, rechecking and packing to eliminate the possibility of error. If any shipping errors are discovered:

1. Carefully go through the packing materials to be sure nothing was inadvertently overlooked when the unit was unpacked.
2. Call the dealer you purchased the product from and report the shortage. The materials are packed at the factory and none should be missing if the box has never been opened.
3. Claims must be filed within 30 days of purchase.

Claims for Damages in Transit

Our shipping responsibility ceases with the safe delivery in good condition to the transportation company. Claims for loss or damage in transit should be made promptly and directly to the transportation company.

If, upon delivery, the outside of the packing case shows evidence of rough handling or damage, the transportation company's agent should be requested to make a "Received in Bad Order" notation on the delivery receipt. If within 48 hours of delivery, concealed damage is noted upon unpacking the shipment and no exterior evidence of rough handling is apparent, the transportation company should be requested to make out a "Bad Order" report. This procedure is necessary in order for the dealer to maintain the right of recovery from the carrier.

Notes

Notes

Manufactured By
Reichert, Inc.
3362 Walden Ave
Suite 100
Depew, NY 14043
USA

Toll Free 888-849-8955
Phone: +1 716-686-4500
Fax: +1 716-686-4555
Email: reichert.information@ametek.com
www.reichert.com

Authorized European Service Center
AMETEK GmbH
Business Unit Reichert
Email: info.reichert-de@ametek.com
Tel: +49 (89) 315 89 110

EC REP

Emergo Europe
Westervoortsedijk 60
6827 AT Arnhem
The Netherlands

CH REP

MedEnvoy Switzerland
Gotthardstrasse 28
6302 Zug
Switzerland

ISO 13485 Certified

CE
1639

15170-101 Rev. J

2023-05-01